Interreg France (Channel Manche) England
EuroSwac
European Regional Development Fund

EUROPEAN UNION
European Regional Development Fund

Highly efficient innovative shallow-water based Sea Water Air Conditioning solution for the Channel Area

EUROSWAC

Design Specification for onshore & offshore civil works needed for innovative SWAC system

Ref. 216-T2.1-DMA-004

Internal ref. ENG-PHQ-21-288-RE-004

Rev.	Status	Date	Author	Description	Checker	Approver
00	A	27/03/2023	B. NOGUERRA	1st Revision	C. GAILLARD	F. GIRAUD

A = Issued for comments - B = Issued for approval - C = Approved

Table of Content

1. Introduction

Seawater Air Conditioning (SWAC) systems exploit water resources from near-by waterbodies to cover heating or cooling demands in a heat exchanger system.

The SWAC systems are onshore-based plants and their intake and discharge pipelines are shore-crossing and deployed at the bottom of the sea or ocean. SWAC replaces or enhances the chillers used in conventional AC systems and aims to greatly reduce electricity consumption and cooling costs.

This report outlines the main steps for designing a SWAC system.

This report describes SWAC design alternatives and assessment criteria through 3 generic case studies.

2. Abbreviations and Definitions

AC	Air Conditioning
AHT	Anchor Handling Tug
COP	Coefficient of Performance
HDD	Horizontal Directional Drilling
HDPE	High Density Polyethylene
ITT	Invitation To Tender
LAT	Lowest Astronomical Tide
MSL	Mean Sea Level
MWth	Megawatt thermal
nm	Nautical Miles
OD	Outer Diameter
ROV	Remotely Operated Vehicle
RP	Return Period
SDR	Standard Dimension Ratio
SWAC	Sea Water Air Conditioning
WT	Wall Thickness

3. References / bibliography

Ref	Reference Document	Revision	Title
[1]	ISBN 978-1-56700-251-5	4th Revised	Handbook of hydraulic resistance, I.E. Idelchick
[2]	ISBN 2-212-01894-0	10/1995	Hydraulique générale / Armando Lecastre
[3]	EN112201-1&2		Systèmes de canalisations en plastique pour l'alimentation en eau et pour les branchements et les collecteurs d'assainissement avec pression - Polyéthylène (PE)
[4]	ISO 4427:E part 1 & 2		Systèmes de canalisations en plastique destinés à l'alimentation en eau et aux branchements et collecteurs d'assainissement sous pression
[5]	ISO 12176-1		Tubes et raccords en matières plastiques – Appareillage pour l’assemblage par soudage des systèmes en polyéthylène Partie 1 : Soudage bout à bout

[6]	EN 1610		Mise en œuvre et essai des branchements et canalisations d'assainissement
[7]	EN - 641		Tuyaux pression en béton armé à âme en tôle, joints et pièces spéciales compris
[8]	EN - 639		Prescriptions communes pour tuyaux pression en béton y compris joints et pièces spéciales.
[9]	ISO 2531:2009		Tuyaux, raccords et accessoires en fonte ductile et leurs assemblages pour l'eau
[10]	EN 545-2010		Tuyaux, raccords et accessoires en fonte ductile et leurs assemblages pour canalisations d'eau - Prescriptions et méthodes d'essai
[11]	IMCA S 003	2015	International Marine Contractor's Association, Guidelines for the use of MBES echo-sounders for offshore survey
[12]	DNV-RP-F109		On-bottom Stability of submarine pipeline Systems
[13]	DNV-RP-C205	09/2021	Environmental conditions and environmental loads
[14]	Eurocode 7, Part 2	EN 1997- 2	Geotechnical design – Ground investigation and Testing
[15]	ASTM D2488	17	Standard Practice for Description and Identification of Soils
[16]	ISO 19901-8		Industries du pétrole et du gaz naturel — Exigences spécifiques relatives aux structures en mer — Partie 8: Investigations des sols en mer
[17]	Pipelife	2013	Technical catalogue for submarine installation of polyethylene pipe
[18]	Simona	2020	Engineering Manual for Piping Systems
[19]	Bonna TP		Le tuyau en béton armé à âme en tôle – Tuyau pression
[20]	PAM – St Gobain	2015	Catalogue HydroClass

4. Methodology

The following flowchart aims at presenting the keys steps to design and specify a SWAC. Main step are further detailed into dedicated sections.

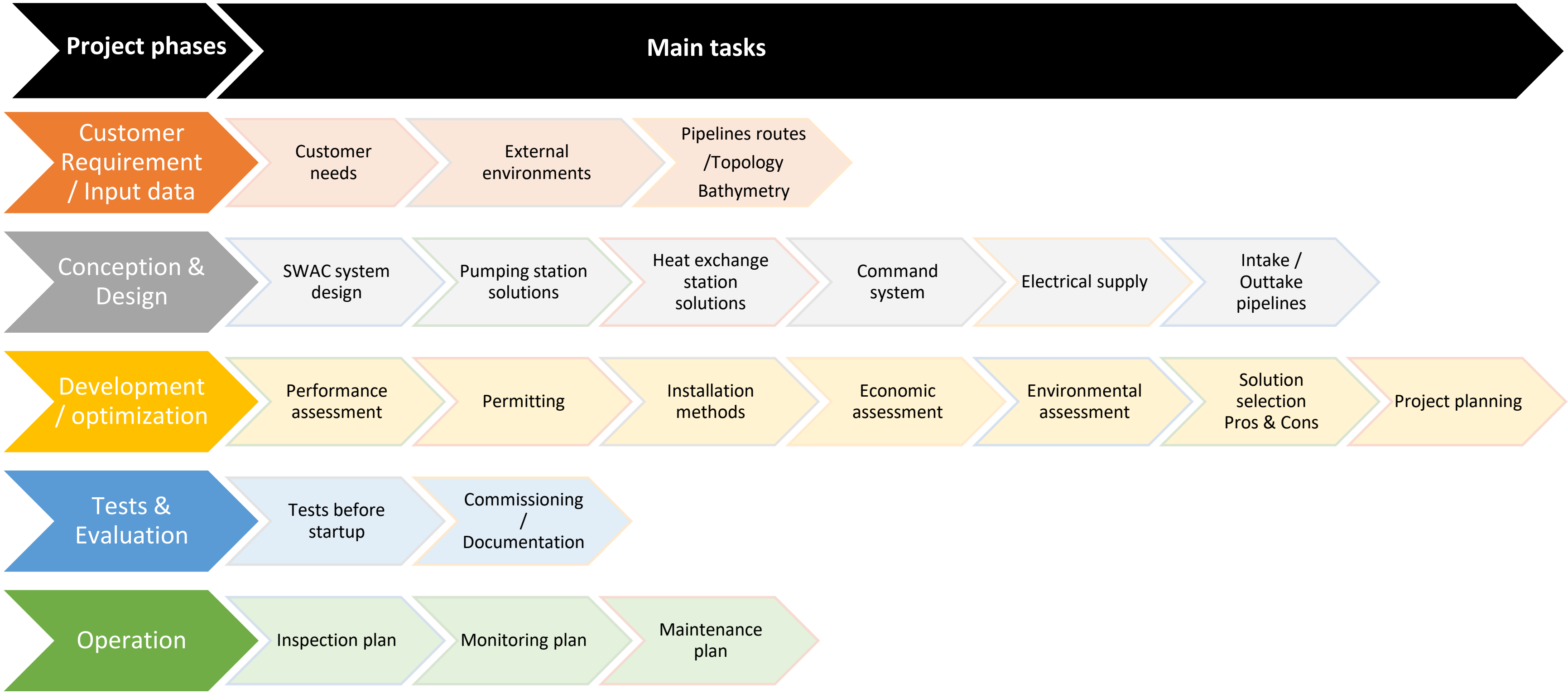

Project phases	Main tasks						
Customer Requirement / Input data	Customer needs	External environments	Pipelines routes /Topology Bathymetry				
Conception & Design	SWAC system design	Pumping station solutions	Heat exchange station solutions	Command system	Electrical supply	Intake / Outtake pipelines	
Development / optimization	Performance assessment	Permitting	Installation methods	Economic assessment	Environmental assessment	Solution selection Pros & Cons	Project planning
Tests & Evaluation	Tests before startup	Commissioning / Documentation					
Operation	Inspection plan	Monitoring plan	Maintenance plan				

5. SWAC system design case study

The architecture of the SWAC system will be affected by several parameters:

- The site (location at vicinity of sea water)
- The existing customer installation,
- The cooling load,
- The pumping station,
- The heat exchange station,
- The command system,
- The electrical supply,
- The pipeline routes,
- The intake and outtake pipelines,
- The maintenance and repair.

Different configurations are possible but only three typical examples are discussed in the next sections.

5.1 Configuration 1 – Open circuit plant-sea

For this design, cool seawater is directly brought from the sea to the customer facility heat exchanger using pumps. Once the seawater has gone through the heat exchanger, it directly goes back to the sea through a dedicated discharge pipe.

Note: To prevent vacuum effect in SWAC system in case of emergency shutdown, a pressure release valve can be installed as part of the system in the customer facility.

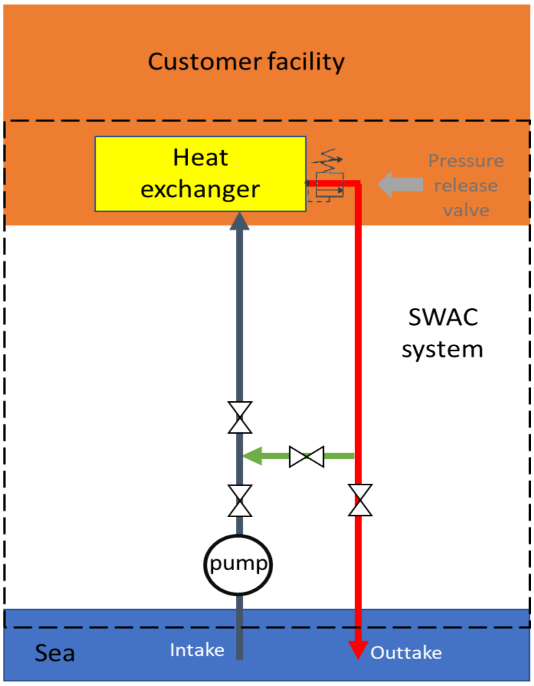

Figure 1 SWAC design - Configuration 1

5.2 Configuration 2 – Open circuit plant-sea with turbine

This solution is a variation of the previous configuration which implements a water turbine at the end of the discharge pipeline in order to recover energy when customer facility altitude is high and optimize SWAC system electricity requirements.

Note: In order to ensure the fall-down of seawater into discharge pipe, to avoid the risk of vacuum and maximize the use of the turbine, fluid exiting plant heat exchanger shall be at atmospheric pressure.

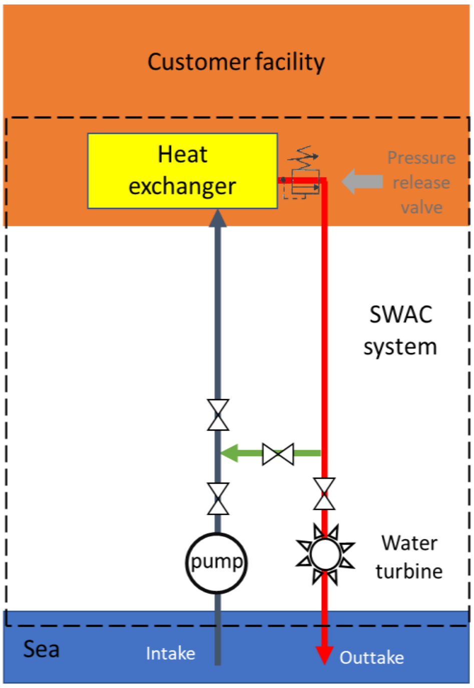

Figure 2 SWAC design - Configuration 2

5.3 Configuration 3 – Closed circuit with fresh water

For this design, SWAC system is composed of a main closed circuit containing fresh water, which is cooled down by a second open circuit of seawater. The same branch circuit presented in the other configurations is integrated in this design, in case of maintenance of the seawater pump or the heat exchanger between the two circuits.

Note: For this solution, a large pressure increase is expected in the lowest part of the loop, both in descending and ascending pipe (typically around 20 bar could occur at end of the return pipe depending on customer facility altitude). Such kind of pressure must be considered when designing pipelines/spools at this location.

In addition, plate heat exchanger shall be avoided. Tubular exchanger is considered as it allows a different pressure between circuits.

Finally, the addition of frigorific adjuvant in the closed loop fresh water circuit could be considered to increase the efficiency of the closed loop circuit.

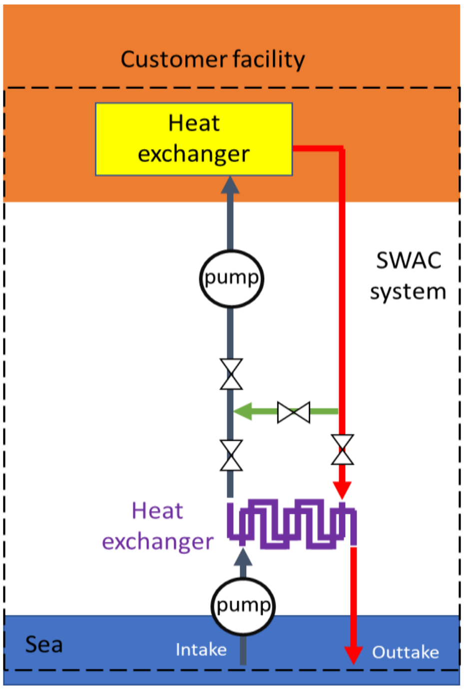

Figure 3 SWAC design - Configuration 3

5.4 Pumping station

The pumping station is used to move the sea water through the system, from the intake to the heat exchange station.

The pumping station plays a crucial role in the overall operation of the SWAC system, and its design and operation need to be carefully considered. The key features to consider about the pumping station are:

- Pumps type: The type of pump used in the pumping station will depend on the flow rate and pressure requirements of the system. Common types of pumps used in SWAC systems include centrifugal pumps and positive displacement pumps.
- Pumps capacity: The capacity of the pump(s) in the pumping station needs to be matched to the flow rate requirements of the system. The pump capacity needs to consider factors such as pipeline head losses and potential changes in seawater temperature. In addition pump system shall consider redundancy: typically 3 pumps (2 pumps with 50% flow capacity each with 1 full spare with another 50% capacity).
- Power source: The pumping station will require a power source to operate the pumps. It must be designed with redundancy to ensure reliable operation of the system.
- Control systems: The pumping station will require control systems to monitor and control the flow rate and pressure of the seawater. The control systems will need to be designed to respond to changes in seawater temperature and other system variables.
- Maintenance: The pumping station will require regular maintenance to ensure reliable operation of the system. Maintenance may include cleaning of the seawater intake screens, inspection of the pipeline and pumps, and replacement of worn or damaged components.
- Location: As described in section 5.6.2, the pumps can be installed on sea bottom inside a subsea structure, or in a deep well, onshore. Pros and cons of those 2 options are discussed below.

5.4.1 Subsea pumping station

Artist view of SWAC architecture considering subsea pumps is presented below:

Main components of this architecture:

- A strainer at water intake pipeline end to filter the incoming water,
- Intake pipeline (length depending on the required expected temperature, size depending on the seawater volume required),
- Pumping station structure located in the first 500m from shore at suitable water depth,
- Discharge hose (return pipeline from shore) to a turbulent area to reject return water.

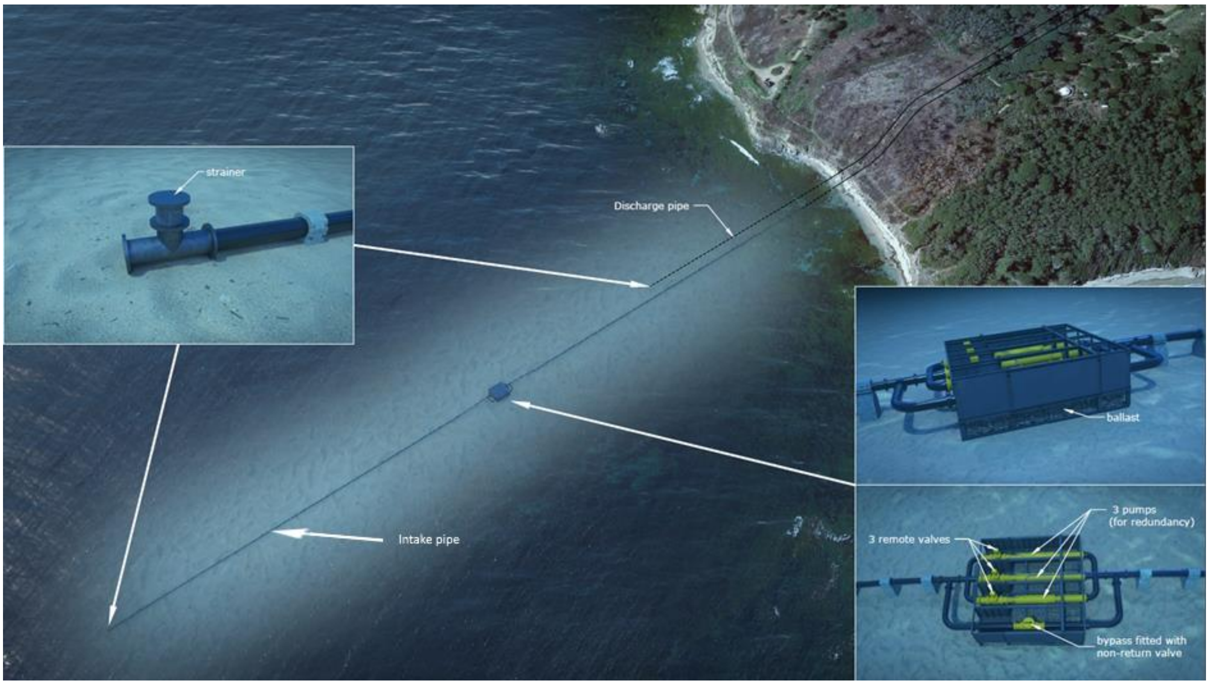

SUBSEA PUMP OPTION – LOCATED SUBSEA		
CRITERIA	PROS	CONS
INSTALLATION / OPERATION/MAINTENANCE	3 pumps installed for redundancy.	Subsea pumps : maintenance and reliability
	Pump system with skirts can be quickly deployed at seabed.	Submarine pipelines to be installed in several sections. Tie-in spools to be considered to link subsea sections.
		Difficult access for inspection and maintenance. Risk of corrosion during life-time service.
COST		Pump system requires a minimum of 3 pumps, a by-pass, power & monitoring system with umbilical. Stability of the structure in shallow water to be assessed (ballast, mattress, driven piles…)

Table 1 Subsea pump option pros & cons

5.4.2 Pumping station in an onshore deep well

Artist view of SWAC architecture considering onshore deep well is presented below:

Main components of this architecture:

- A strainer at water intake pipeline end to filter the incoming water,
- Intake pipeline (length depending on the required expected temperature, size depending on the seawater volume required in the deep well),
- Deep well (huge pool) located onshore fed naturally by seawater,
- Pumping system deployed in the deep well,
- Discharge hose (return pipeline from shore) to a turbulent area to reject return water.

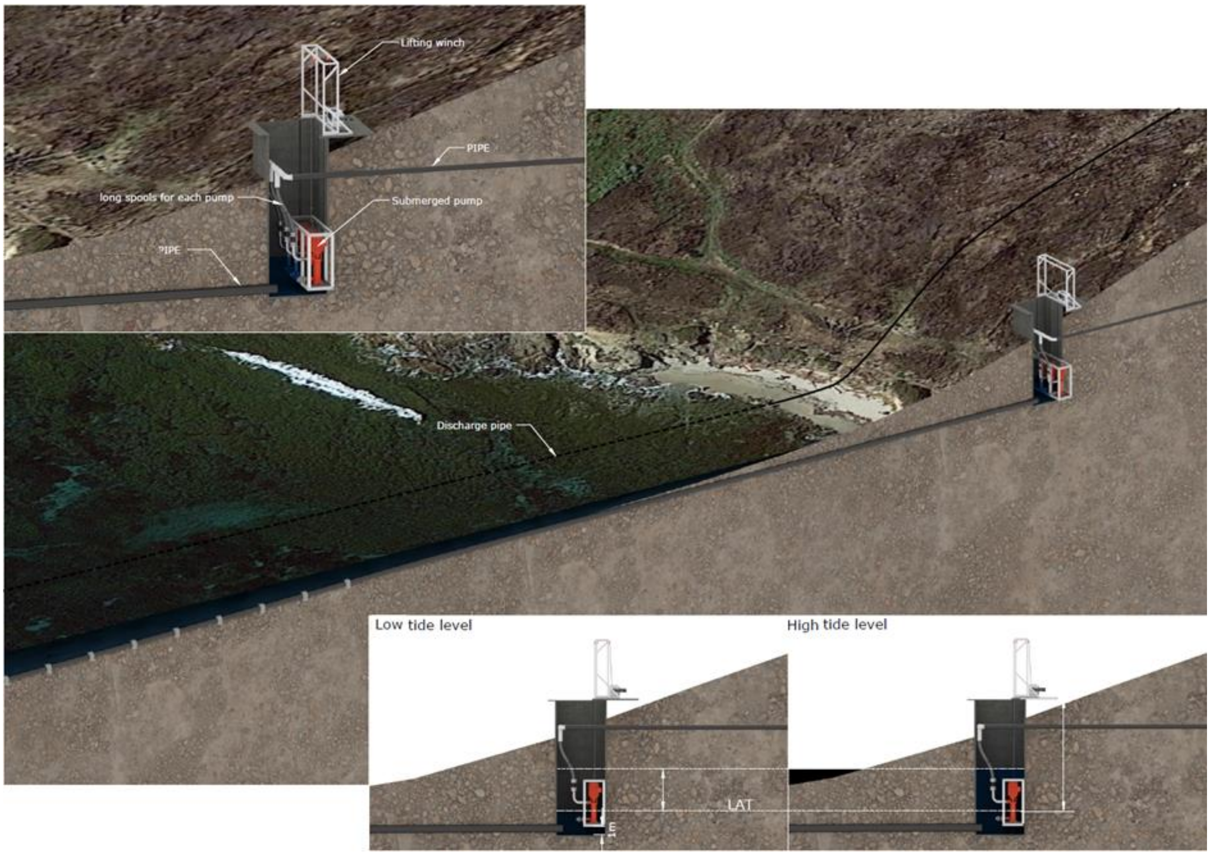

ONSHORE PUMP OPTION – LOCATED IN DEEP WELL ONSHORE		
CRITERIA	PROS	CONS
INSTALLATION / OPERATION	Access for pumping station maintenance is easier, using winch to lift-up pumps at top of well.	
	No heavy lift. Only pipeline sections to be installed.	Installation of pump system at bottom of a narrow deep well. Pipeline section to be inserted in 200m long tunnel.
		Huge excavation works are expected to dig the deep well and drill a tunnel from pit to sea to connect submarine pipeline.
COST		Excessive costs to perform excavation works

Table 2 Pump station located in an onshore well - pros & cons

5.5 Heat exchange station

Heat exchanger is the keystone of an operating SWAC system in order to maximize exchange surface area, hence efficiency.

SWAC systems use heat exchangers to transfer heat between the chilled seawater and the air conditioning system's refrigerant. There are several types of heat exchangers that can be used in a SWAC system:

1. **Shell and tube heat exchangers**: this is the most commonly used type of heat exchanger in SWAC systems. It consists of a shell (outer vessel) and a tube bundle (inner vessel) that contains the seawater. The refrigerant flows through the tubes, and the seawater flows around the tubes, transferring heat from the refrigerant to the seawater.

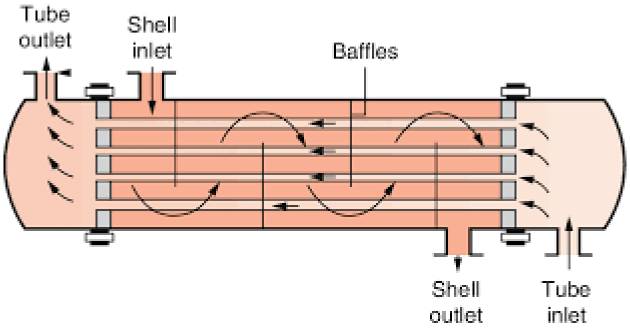

Figure 1 Shell and tube heat exchanger working principle.

2. **Plate heat exchangers**: Plate heat exchangers consist of a series of thin plates with small gaps between them. The refrigerant flows through alternate plates, and the seawater flows through the remaining plates, transferring heat between them.

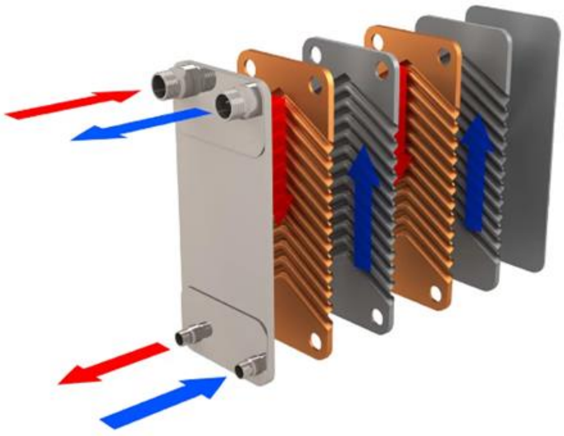

Figure 2 Plate heat exchanger working principle

3. **Plate and frame heat exchangers**: Plate and frame heat exchangers are similar to plate heat exchangers, but they have frames that hold the plates together and provide support.

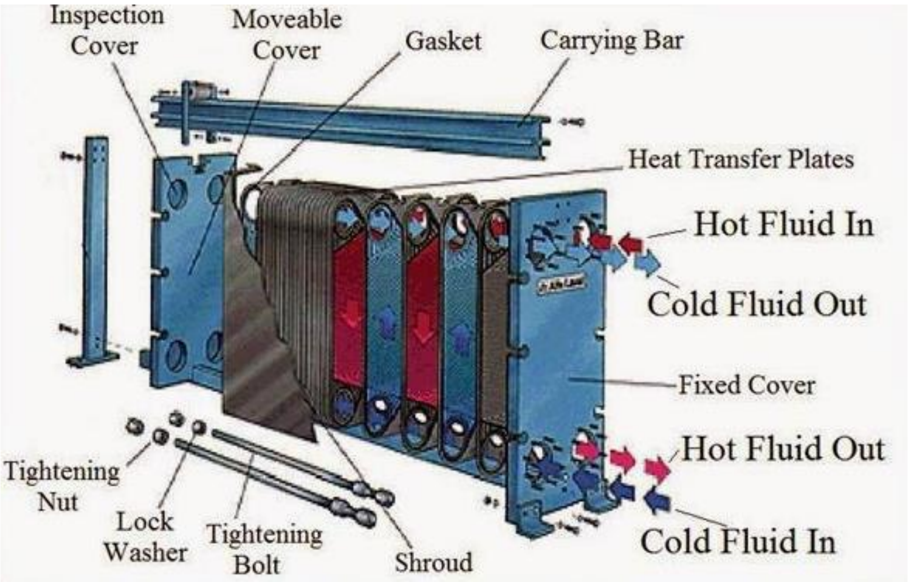

Figure 3 Plate and frame heat exchangers working principle

4. **Double-pipe heat exchangers**: Double-pipe heat exchangers consist of two pipes, one inside the other. The refrigerant flows through the inner pipe, and the seawater flows through the outer pipe, transferring heat between them.

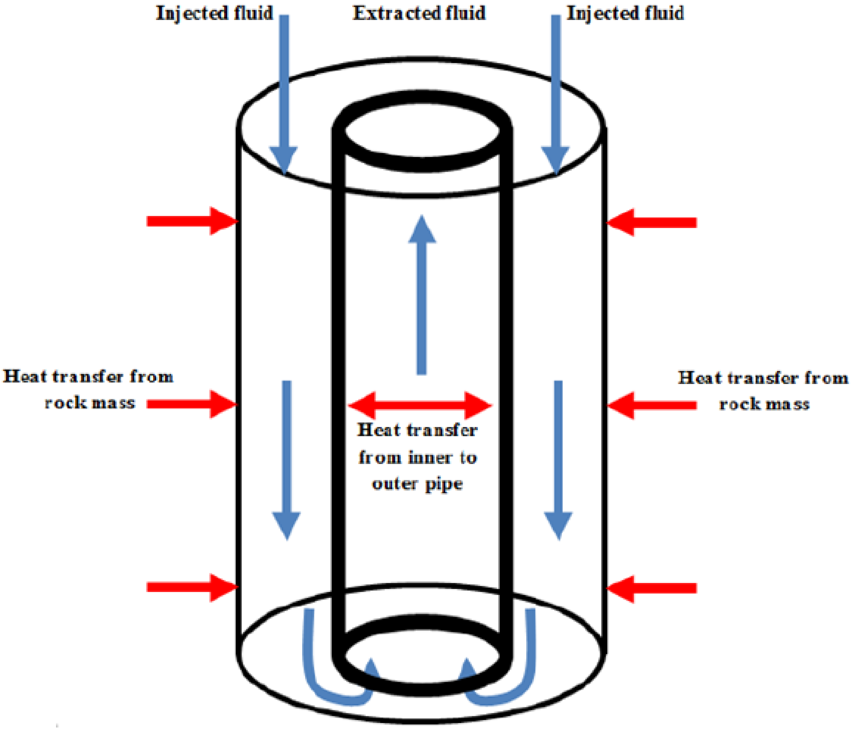

Figure 4 Double pipe heat exchangers working principle

5. **Spiral heat exchangers**: Spiral heat exchangers have a spiral design that allows for high heat transfer efficiency in a small space. The refrigerant and seawater flow in opposite directions, creating a turbulent flow that maximizes heat transfer.

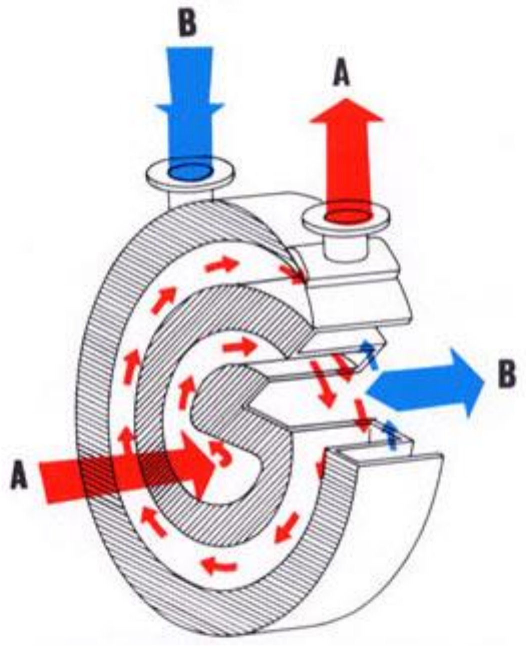

Figure 1 Spiral heat exchangers working principle

5.5.1 Configuration 1

In addition to the plate heat exchanger (shown in Figure 2), branch circuit integrated in Configuration 1 design requires the use of one coil heat exchanger. Materials and dimensions of the coil are to be determined to offer a good capacity of cooling off seawater.

Figure 2 Example of a coil heat exchanger

Note: The two types of heat exchangers presented in this case are common for all SWAC design configuration.

5.5.2 Configuration 2

In addition to the plate heat exchanger and the coil heat exchanger common for all designs, the Configuration 2 integrates a water turbine at the end of return circuit. This turbine allows to recover some energy to give it back to the pump system, using an energy converter if the elevation of the customer facility is high enough.

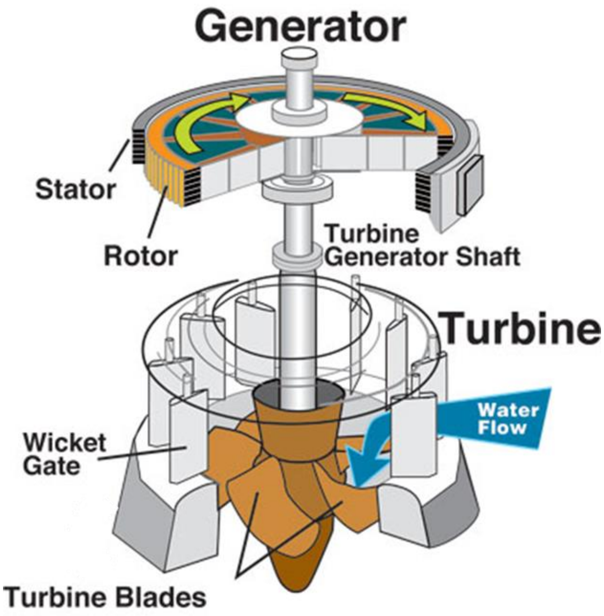

5.5.3 Configuration 3

In addition to the plate heat exchanger and the coil heat exchanger common for all designs, the Configuration 3 necessitates a third heat exchanger, for seawater open circuit to cool down fresh water inside closed circuit. Due to the high pressure expected inside closed circuit at heat exchanger location (depending on customer facility elevation), it is suggested to install a tubular heat exchanger (instead of a plate exchanger).

Tubular heat exchangers allow to cool-off “Tube side” fluid by providing a cooled fluid into “Shell Side” inlet, as shown below:

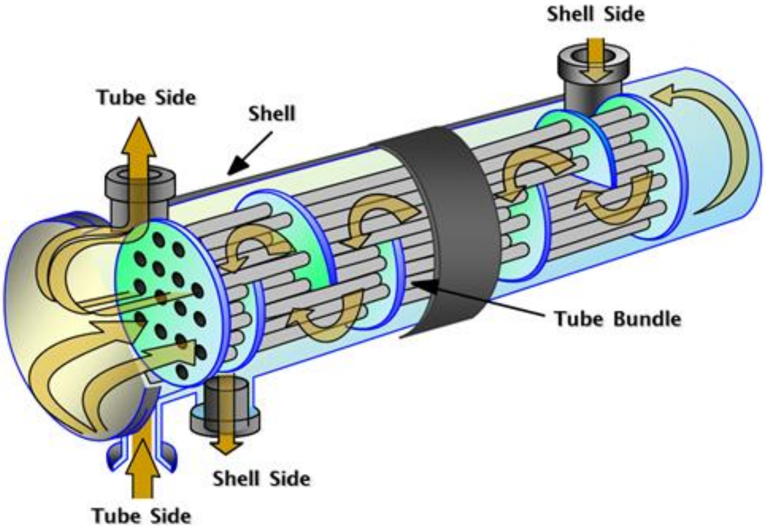

Figure 3 Tubular heat exchanger working principle

5.6 Pipeline routes

5.6.1 Underground pipeline route

Underground pipeline routes must be considered to carry sea water from the shore crossing area to the heat exchange station, depending on the location of the customer facility.

The underground pipeline will either be installed on supports on ground or buried to typically 1m top of pipe depending on environmental rules on the site and the requirement for insulation of the pipeline.

5.6.2 Subsea pipeline route

Submarine pipeline route is common for all the SWAC design studied. Length of submarine pipeline and water intake depth will depend on the required temperature drop. Length of the discharge pipe is dependent on the allowable temperature of seawater return in the environment and its temperature dissipation analysis depending on current & sea conditions at site.

The submarine pipeline route shall minimize the impact on marine life as much as possible.

5.6.3 Pipelines shore crossing

The installation of pipelines through a shore crossing area is a complex and challenging process. There are several techniques that can be used to install pipelines through a shore crossing area, including:

- Trenching: This involves digging a trench in the seabed, laying the pipeline in the trench, and then backfilling the trench. Trenching is often used for shallow water installations.
- Horizontal Directional Drilling (HDD): This involves drilling a tunnel under the seabed and pulling the pipeline through the tunnel. HDD is often used for deeper water installations or installations where environmental concerns make trenching difficult.
- Microtunneling: This technique is similar to HDD, but on a smaller scale. Microtunneling involves using a microtunneling machine to bore a tunnel under the seabed and then pulling the pipeline through the tunnel.

The choice of technique will depend on a variety of factors, including soil characteristics, water depth, seabed conditions, environmental concerns, and project budget.

5.7 Customer installation

The customer installation is the end-user facility requiring a cooling system, taking benefit of the specific capabilities of a SWAC. The freshwater loop that carries calories from the spaces to be cooled-down to the heat exchanger is called the “secondary loop”.

The customer installation defines the minimum performance requirements for the expected SWAC system: the cooling need. This is not a SWAC parameter as it is determined by the customer only but holds substantial importance regarding SWAC design. This is why it is considered as a subsystem. Just like the “external environment” component, it is not an output of the SWAC design but an input. The main inputs used for the definition of the cooling need at basic design level are:

- The maximum Customer cooling need (in MWth*),
- The target delivered temperature (usually 7°C or 9°C),
- The temperature drop within the local cooled loop (usually 5° for 7°C/12°C or 9°C/14°C loops).

These are usually given by the Customer. They serve as a base for the calculation of the SWAC design, allowing the detection of potential SWAC projects. Help form SWAC specialists may be required for the definition of the maximum customer cooling need at this point via the diffusion of assistance tools as shown below.

*MWth is a unit of power used to express the thermal output or heat transfer capacity of a system. It stands for "megawatt thermal" and is often used in the energy industry to describe the power output of thermal power plants, boilers, and other heat-generating or cooling systems.

5.7.1 Example of assistance tool

Here below is a theoretical example of an assistance tool, to show how it can assist in the design of the maximum cooling power demand for a given customer (in this example, data comes from former studies in a tropical country).

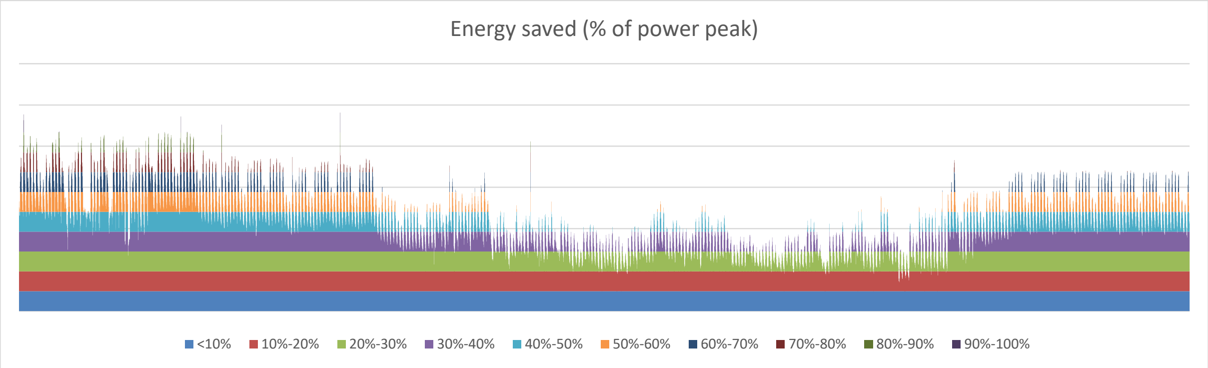

Figure 4 Energy saved per % of power peak

In this graph, the first 20% of the peak power (dark blue and red stripes at the bottom) are used almost all the time, and then the upper slices are less and less used throughout the year.

The graph below shows the number of hours requiring a certain amount of cooling demand. Clearly, the highest cooling powers are only used for a few hours.

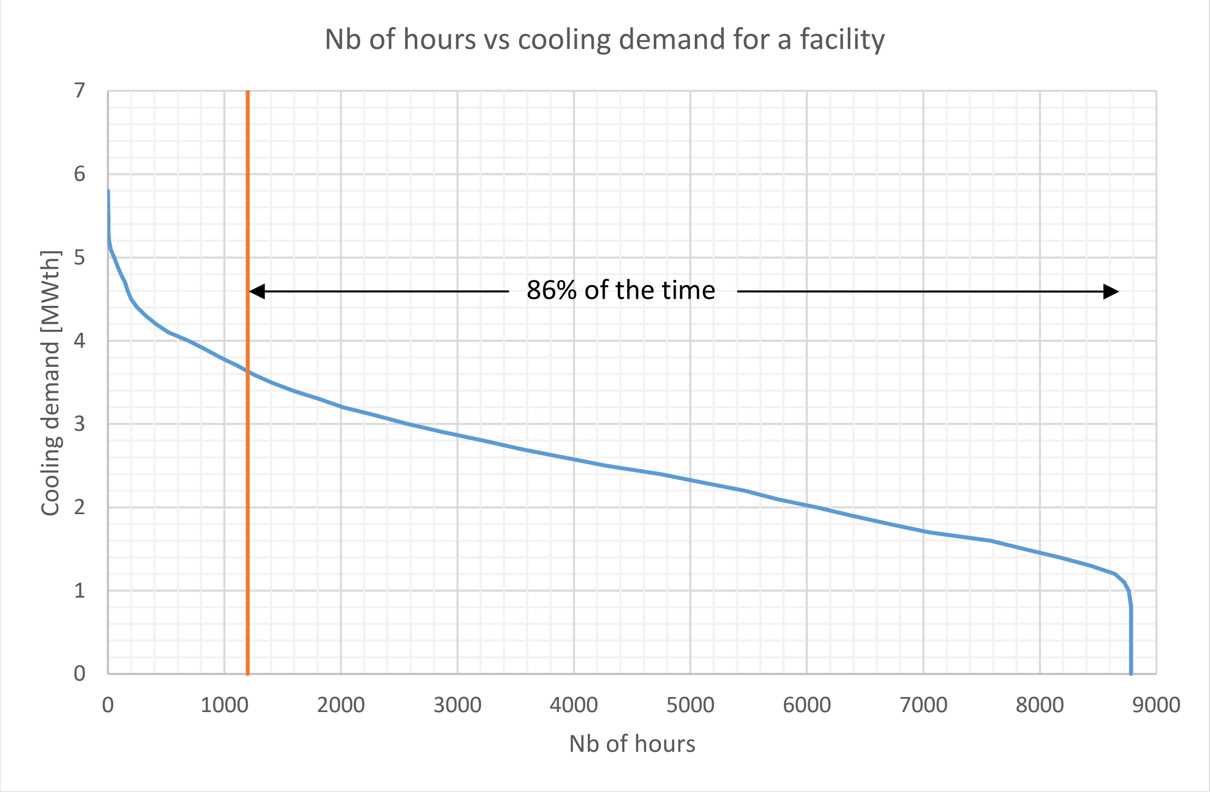

Figure 5 Number of hours vs cooling power

The slices over 60% of peak power are used only 14% of the time. This leads us to assume that building a SWAC to provide cooling even for the peak cooling demand is not worth the extra building costs. Assuming now, that a smaller SWAC is considered, providing less than the peak power. Amount of energy saved is presented below.

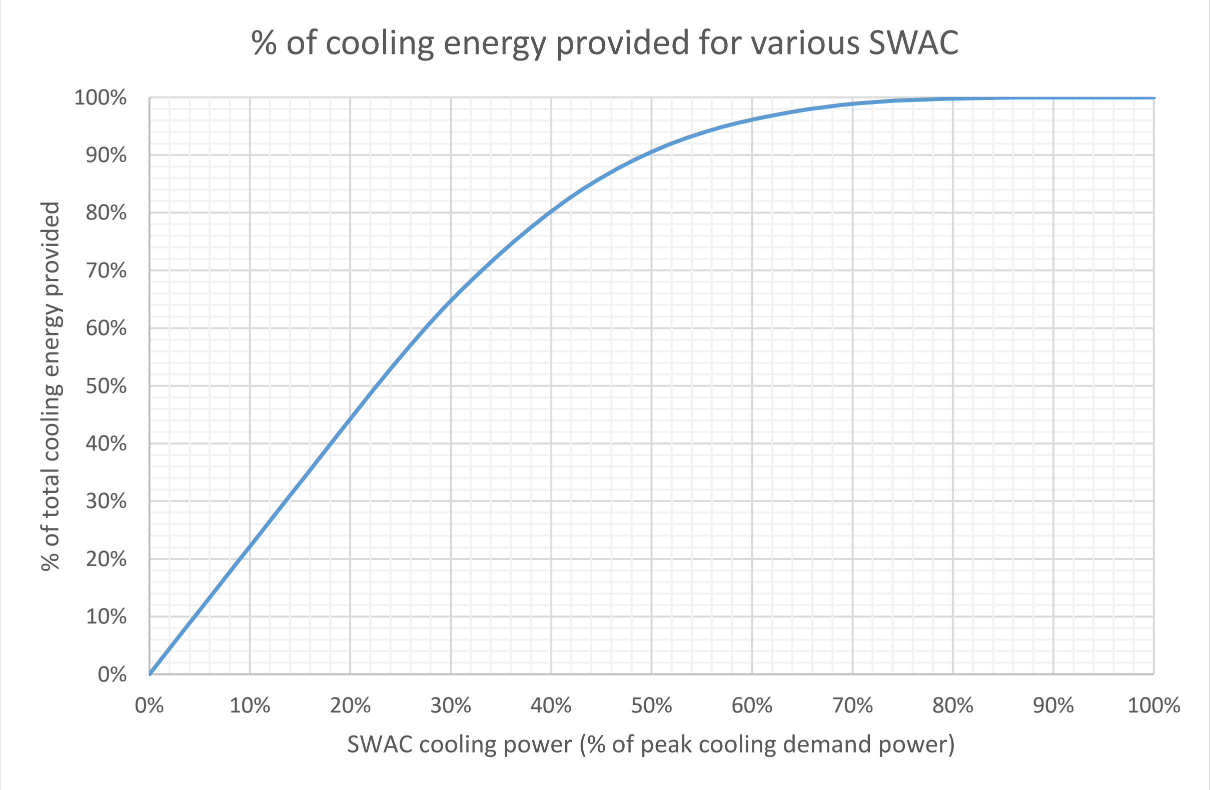

Figure 6 Energy saved versus SWAC peak capacity

At 40% of the peak power, the SWAC provides 80% of the cooling energy needed by the facility. A guess could be therefore to build a SWAC sized at 40 to 60% of the peak demand.
The following curve is obtained by integrating the estimated building costs:

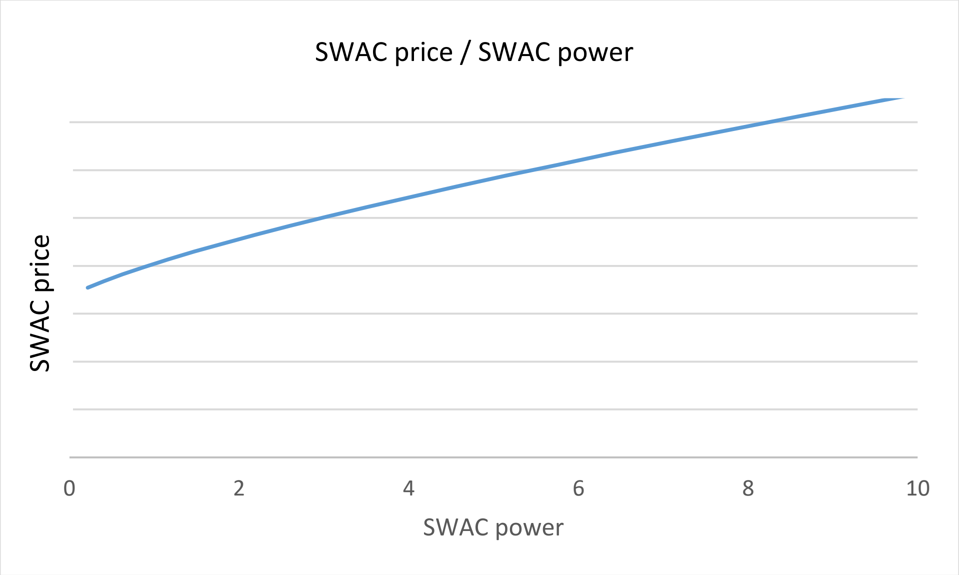

Figure 7 Shape of the CAPEX evolution with SWAC power [MWth]

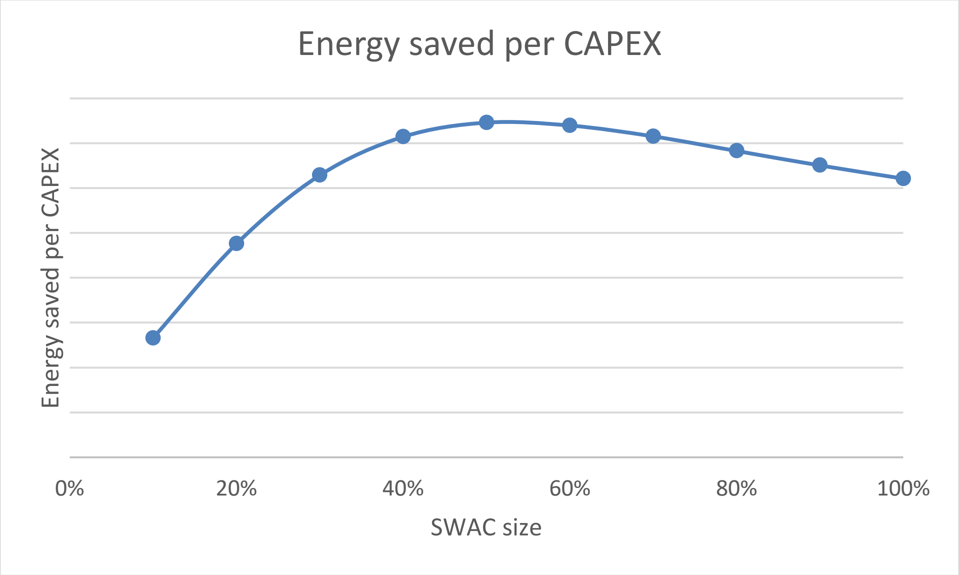

Figure 8 Energy saved per CAPEX

In this case, the optimum size for the SWAC is 50% of the peak cooling demand. This result is true for a specific building in a specific region, and the right-sizing for other facilities might be slightly different. A good knowledge of the local external environment and of the customer is therefore crucial to create an appropriate right-sizing assistance tool for a SWAC, even more when it allows to give a more representative design for a specified customer. When sizing at the peak cooling demand, the risk is to scare away potential investors by over evaluating the CAPEX. The variations of CAPEX are substantial with variation of the peak cooling power.

5.8 Command system

The command system of a SWAC is responsible for controlling and coordinating the operation of the electrical components to ensure the efficient and reliable operation of the system. It includes a central control room where operators can monitor the system's performance and adjust working parameters as needed. The control room may be equipped with a variety of monitoring and control devices, including sensors, programmable logic controllers (PLCs), human-machine interfaces (HMIs), and other computer systems.

The command system is responsible for maintaining optimal operating conditions throughout the SWAC system. This includes monitoring and controlling in real time the temperature, pressure, flow rate, and other parameters of the seawater. It coordinates the operation of water pumps, valves, heat exchangers to ensure that the system operates in a safe and efficient manner.

The command system of a SWAC is equipped with sensors that detect any faults or abnormalities in the system. This information is analysed by the system, which then provides a diagnosis and recommends appropriate actions for corrective maintenance. The command system may also include various safety and emergency shutdown features, such as alarms and emergency stop buttons, to protect the system and its components in the event of a malfunction or other abnormal condition (overpressure or overtemperature situations).

5.9 Electrical supply

A SWAC system typically requires a significant amount of electrical power to operate, as it involves running large pumps and other equipment such as heat exchanger station and command system. The sizing of the electrical supply of a SWAC system is impacted by several parameters such as:

- The cooling load of the Customer installation which determines the sizing of the SWAC system, and consequently, the electrical supply required to power the system.
- The cooling demand variation (peak and lowest demand) during a period of time as it impacts the amplitude of the required electrical supply all along the year.
- The efficiency of the SWAC system, according to selected design, will significantly affect the needed electrical power to achieve a given cooling requirement.
- The temperature of the seawater used in the SWAC system will impact the efficiency of the system and therefore the electrical supply required to achieve the desired cooling effect.
- The performance of control system used to operate the SWAC system may also impact the electrical power required to operate the system.
- The presence or absence of backup power sources will impact the electrical supply required to power the SWAC system in the event of a power outage.

5.10 Intake and outtake pipelines

- The intake pipeline function is to carry cold sea water up to the heat exchange station.
- The outtake pipe (or discharge) releases at sea the warmed sea water coming from the heat exchange station. This pipeline also crosses the shore area.

From the shore crossing area to the pumping station and / or heat exchange station, those pipelines may be buried.

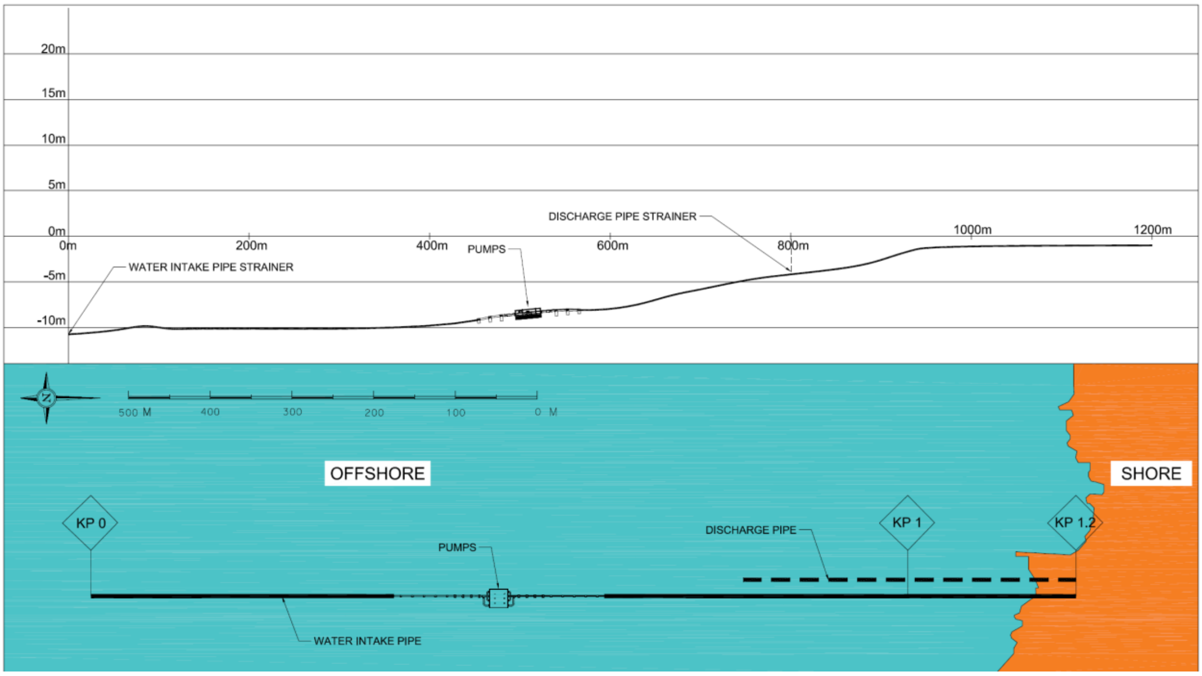

Figure 9 Option with subsea pumps

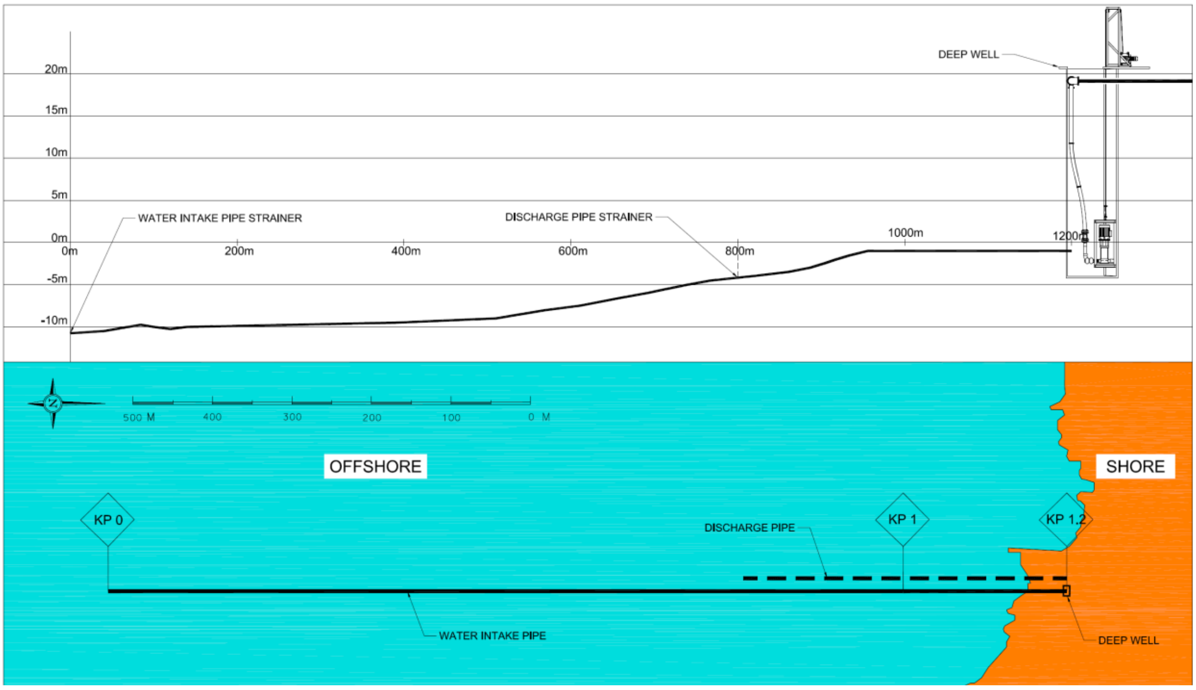

Figure 10 Option with deep well

5.10.1 Pipeline material selection

SWAC systems use pipes made of materials that can withstand exposure to seawater, which is corrosive and can cause damage to certain metals. The most commonly used materials for intake/outtake pipelines in SWAC systems include:

- High-Density Polyethylene (HDPE) - This thermoplastic polymer is resistant to corrosion, chemicals, and abrasion. HDPE pipes are lightweight, flexible, and have a long service life, making them ideal for use in SWAC systems.
- Concrete pipe with steel sheet core – The steel sheet core is resistant to corrosion. Concrete is a durable material that can withstand heavy loads and harsh environmental conditions. The combination of concrete and steel provides good thermal stability, which can help to maintain a consistent temperature in the SWAC system. Concrete pipes are generally more cost-effective than other materials such as steel or plastic, and the steel sheet core provides an added layer of protection without significantly increasing costs. Concrete is a sustainable material that can be made using locally sourced materials, reducing the environmental impact of the SWAC system.
- Fiberglass Reinforced Plastic (FRP) - This composite material is made by combining glass fibers with a polymer matrix. FRP pipes are strong, lightweight, and corrosion-resistant, making them a popular choice for SWAC systems.
- Stainless Steel - This alloy is highly resistant to corrosion, making it an excellent choice for SWAC systems that require a high level of durability. Stainless steel pipes are strong, easy to clean, and can withstand high temperatures and pressures.
- Copper-Nickel Alloys - These alloys are highly resistant to corrosion and are commonly used in marine applications. Copper-nickel pipes are durable, strong, and have a long service life, making them a good choice for SWAC systems.

The choice of material for intake/outtake pipelines in a SWAC system depends on factors such as the specific requirements of the system, the water chemistry, the environmental conditions and project budget.

The cost of the last three options may be prohibitive.

5.10.2 Diameter/WT sizing

The diameter of the pipeline is typically determined by the required flow rate, which is determined by the cooling load of the facility. The larger the flow rate, the larger the diameter of the pipeline, this having also a favorable impact on head losses.
The wall thickness is determined by the pressure rating of the pipeline and the depth of the water at the intake location. The deeper the water, the higher the pressure rating required, and therefore the thicker the wall of the pipeline.

It should be noted that the bend radius of the pipeline depends on its diameter. The larger the diameter of the pipeline is, the larger the bend radius needs to be to avoid damaging the pipeline, this having a significant impact on the global layout of the installation.

Various sizing criteria are used to determine the pipelines geometry from a mechanical point of view.

5.10.2.1Allowable static pressure

After the pumps, the pipe must sustain the pressure and the maximum overpressure they can take-in; this pressure depends on the material, the SDR (ratio Diameter / WT), and the water temperature. Example below for HDPE pipe:

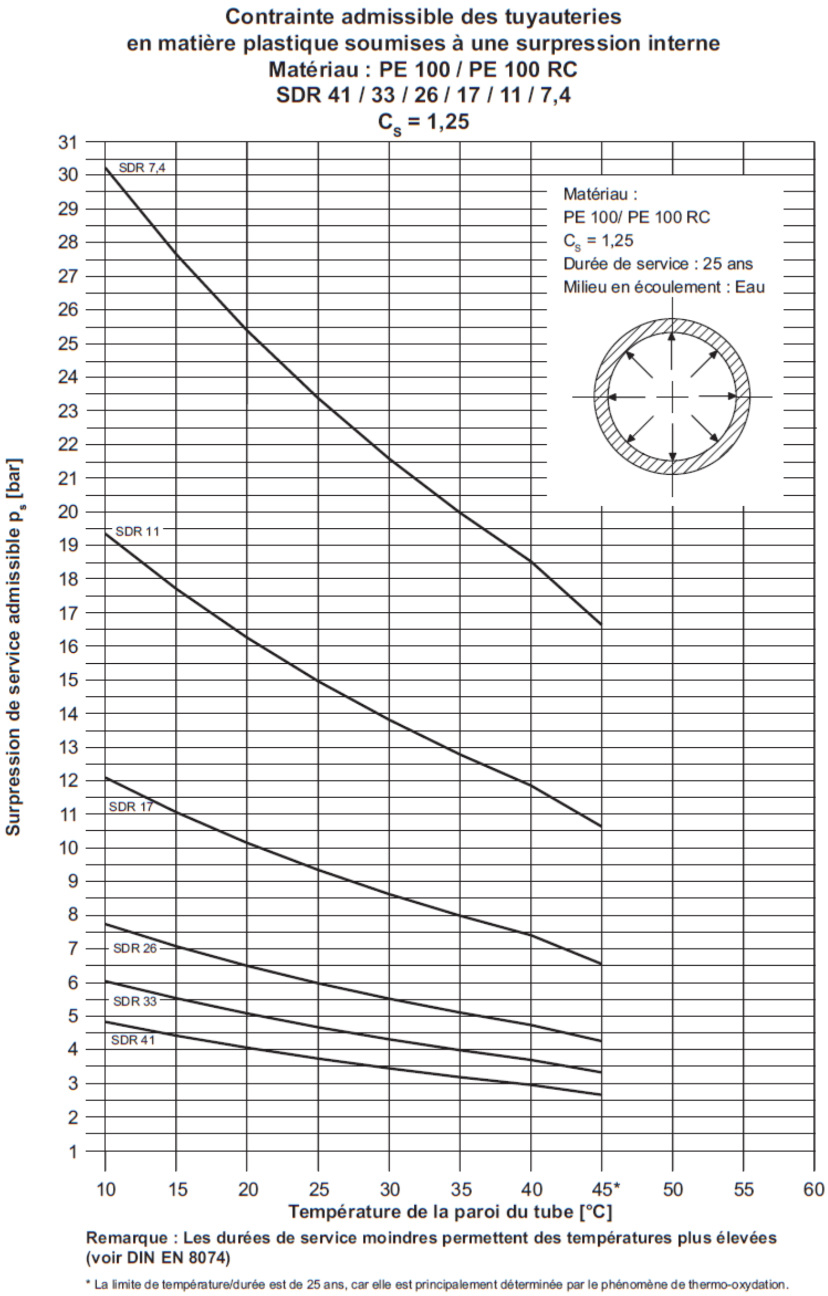

Figure 11 Critical overpressure, example for PE100 pipe

On this example, for HDPE pipelines, temperature has a direct impact on the allowable static pressure.

5.10.3 Pipeline stability

The calculation method to define pipeline stability near the shore typically involves a combination of geotechnical and hydraulic analyses.

It requires calculating the maximum bending moment and axial force that the pipeline will be subject to under different loading conditions. These calculations will then be compared to the allowable bending moment and axial force for the pipeline, which will depend on the pipeline's material, diameter, and wall thickness. If applied constraints exceed the allowable ones, then additional measures may need to be taken to increase the pipeline's stability, such as increasing the diameter or wall thickness of the pipeline or installing ballast or anchors to help secure the pipeline to the seabed.

Numerical models can be used to simulate the behaviour of the pipeline under different conditions and typically use finite element to simulate the response of the pipeline when solicited by the environment.

The stability of a pipeline depends heavily on the soil properties of the seabed. Factors such as soil type, density, and shear strength will all be important in determining whether the pipeline will be stable. Also, Environment factors such as:

- wave height, period, and direction will all affect the forces that the pipeline will be subjected to.
- strength and direction of the currents in the area must be considered.
- properties of the pipeline itself, such as diameter, wall thickness, and material (density), are also important for determining its stability.

A pipeline can be considered to satisfy the absolute static stability requirement when:

$$\gamma_{SC} \cdot \frac{F_Y^* + \mu \cdot F_Z^*}{\mu \cdot w_s + F_R} \leq 1.0 \qquad \text{and} \qquad \gamma_{SC} \cdot \frac{F_Z^*}{w_s} \leq 1.0$$

Where:

γ_{SC} is the safety factor
Fy and **Fz** are the drag and lift efforts (to be calculated according DNVGL methods)
Ws is the total wet weight of the pipeline
µ is the friction factor of the seabed

6. SWAC efficiency assessment

Coefficient of performance (COP) is defined as following:

COP = Q / W

With **Q** = useful heat supplied/removed by the system (kW)

W = net work put into the system (kW)

The following system parameters must be considered for the SWAC sizing:

- SWAC flow rate (m/s)
- Mean temperature of hot source (°C)
- Mean temperature of seawater (cool source) (°C)
- Heat exchanger approach temperature (°C)
- Max heating of sea water (°C)

Approach temperature is the difference between the temperature of the cooled fluid at exchanger exit and the temperature of the cooling fluid entering the exchanger. Required minimum speed for system pumps is obtained according to pipeline diameter to provide enough flow rates for SWAC system to operate in good conditions.

7. Installation methods statements

7.1 Underground pipeline

The typical sequence of main events for underground pipeline installation is described hereafter:

Main Activities	
1.	Survey and pipeline route preparation
2.	Fabrication and transportation from construction site of pipe sections
3.	Digging/excavation of trenches for pipeline and pits for pumps system arrangement when required
4.	Connection of pipe sections to the whole pipeline and burying
5.	Backfilling of trenches

Table 3 Underground pipeline installation sequence of events

7.2 Subsea pipeline

Submarine pipeline installation method is common to all SWAC design studied. The sequence of main events for pipeline installation is described hereafter:

Main Activities	
1.	Survey and seabed soil route preparation
2.	Fabrication and towing/transportation from construction site of submarine pipeline (delivered in sections, typically up to 600m long)
3.	Installation of collars and sealed flanges at both ends of sections
4.	Controlled sinking of pipeline sections down to seabed
5.	Perform metrology and fabricate the spool pieces. Installation of tie-in spools to connect deployed sections

Table 4 Submarine pipeline installation sequence of events

The subsea pipeline installation method is described in more details in the following sections:

7.2.1 Survey and soil preparation

Step	Description	Comment
1.	Geotechnical survey campaign to be performed to assess soil material type along pipeline defined route.	Based on survey report, dredging and/or installation of mattress are to be planned to ensure a good stability of the pipeline once lying onto seabed.
2.	Diving team and dredging/supply vessel mobilization.	
3.	Divers to monitor dredging works and/or stabilization devices installation on seabed along pipeline route. Divers also to install buoys to mark the route for later pipeline installation	

Diver installing a ballast as part of soil preparatory works for a water intake pipeline installation.

Figure 12 Diver during soil preparatory works

7.2.2 Pipe sections preparation

The reception and preparation of the pipe sections prior deployment along the defined route requires the use of near-by port infrastructures fitted with loading docks.

Step	Description	Comment
1.	Construction and transportation to yard of all concrete collars used for pipe stabilization	
2.	Construction and transportation to yard of the water intake piece, which will be welded to form a section of pipe ready for towing.	During sinking, this water intake piece shall be obturated to allow the section to be pressurized
3.	Construction and transportation to yard of sealed flanges for section extremities. Those sealed flanges include a hose fitting to allow connection of a pump on one side and a compressor on the other side of the section to control sinking.	
4.	Installation of the concrete collars along the pipe sections. Several methods can be used: • Installation using a crane and divers • Installation onshore using a lifting frame and skidding ramp • Installation using a barge, allowing to install 3 collars at the same time	Concrete collars are planned to be installed along the whole pipeline as preliminary design.

Figure 13 Installation of concrete weights using crane (left) and frame (right)

Figure 14 Installation of several concrete weights simultaneously

Step	Description	Comment
5.	Connect provided pipe sections to assemble the whole pipeline or 2 sections that will be towed and installed on site.	Depending on the type of pumping system chosen, pipeline can be split in 2 sections, to allow the installation of the subsea pumping system.
6.	Install sealed flanges with hose fittings on pipe sections extremities	
7.	Prepare pipe section for towing and connect it to tugs.	
8.	Tow the pipe section on site	

Typically, sections can be fabricated and towed on site by tug for reasonable length up to 600m. During towing, blind flanges are to be installed on pipe section extremities. According to required length, subsea pipeline would necessitate to be split in several sections.

Figure 1 Pipe sections towing to construction site.

7.2.3 Controlled sinking

Step	Description	Comment
1.	Installation of dead weight along the route, used for initiation.	Environmental conditions and weather forecast to be evaluated and found acceptable to start the activity.
2.	Pipe section is positioned above the route (marked by pre-installed buoys) using tugs and assistance of other small vessels.	
3.	Pipeline tail is connected to dead weight and water is injected inside pipeline by pump to initiate sinking operation.	
4.	Main tug to apply constant tension to pipe section. Air pressure inside pipeline is maintained at constant value with compressor installed on main tug, while pump keeps on injecting water inside pipeline from tail to sink it at bottom. ROV/divers to monitor pipe TDP during all sinking operation.	Detailed analysis to be performed to assess bollard pull required for tug to apply on pipe section.

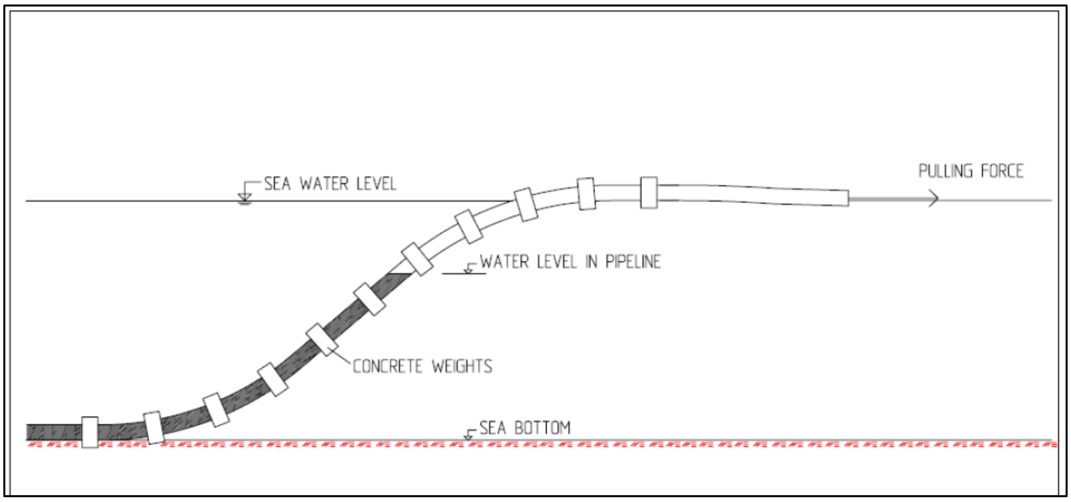

Figure 2 Installation principle of a pipe section

Figure 3 Initiation (left) and End (right) of pipe section installation.

Step	Description	Comment
5.	Once pipe section is fully lying onto seabed, ROV/divers to disconnect compressor hose and main tug from pipe.	
6.	Prior disconnecting the pump, as an option, perform an hydrotest of the section to check for potential leak.	

7.2.4 Tie-in spool fabrication and installation

Once all pipe sections have been sunk, tie-in spools must be fabricated and installed to connect all sections, as per the following steps:

Step	Description	Comment
1.	Perform a metrology for all tie-in spools to be fabricated.	For an onshore pumping system, only one tie-in spool is needed to connect the pipeline to the pumping system.
2.	Based on metrology assessed offshore, tie-in spools are fabricated in a near-by yard (if possible). A first hydrotest on each spool is to be performed on yard.	
3.	Spools are brought on site and equipped with parachute bags. Spools are either deployed with a vessel crane or sunk by divers.	

4.	Divers to remove sealed flanges at pipe ends. Divers to align tie-in spool flange with pipe flange. Divers to insert bolts and tighten then to connect tie-in spools.	Typical diving tools such as tirfors, lift bags, bolt tightening tool to be used for tie-in spool alignment and connection.

7.3 Maritime and Subsea works

In order to perform the installation of submarine pipeline, minimum naval spread requirements are as follow:

- 1 AHT with a minimum bollard pull capacity which will depend on the final pipe length (typically around 100t).
- 1 installation barge with crane (for subsea deployment)
- 1 diving spread + diving team (mobilised on barge)
- Minimum of 1 supply vessel (to align floating pipe above route and to remain connected to section tail)

The following items are also required to perform the installation, and shall be onboard appropriate vessels:

- Dead weights (installed by barge)
- Pump unit with hoses
- Compressor unit with hoses

8. Permitting

To set up a SWAC system in a given geographical area, it may be necessary to obtain several permits and approvals from various regulatory bodies. The specific permits and approvals required will depend on the location and jurisdiction in the system is planned to be installed.

The purpose of this section is to list the administrative procedures to follow to be granted with the authorization of setting a SWAC system in a chosen place.

- Impact assessment / Public enquiry
- Preventive archaeology request (optional)
- Rights of way or authorisation to occupy the public domain for underground pipelines.
- "Water law" authorisation (equivalent to a declaration under the mining code)
- "Protected species" exemption if necessary
- Building permit or prior declaration according to the characteristics of the project with respect to urban and environmental prescriptions
- Authorisation to occupy the public maritime domain.

9. Environmental conditions

When setting up a SWAC installation, it is important to consider the following environmental conditions:

9.1 Seawater temperature

The temperature of the seawater is a critical factor in the efficiency of the SWAC system. The colder the seawater, the more efficient the system will be. It is essential to choose a location where the seawater temperature remains relatively constant and low throughout the year.

Records of the seawater temperatures over mini. 5 years (when possible) must be collected to size the SWAC system. Examples are given below as an example.

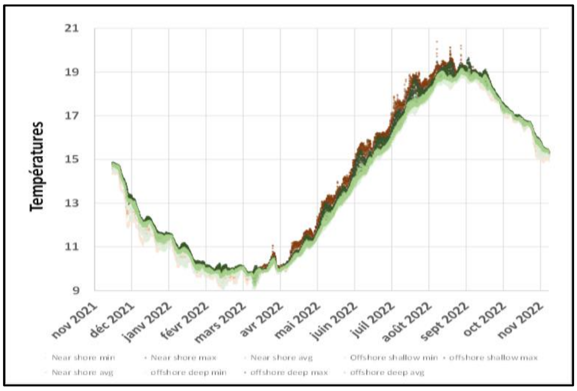

Figure 4 Temperature value over a year

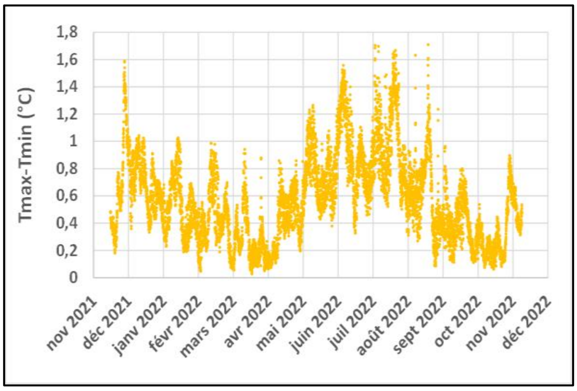

Figure 5 Temperature excursion over a year

9.2 Seawater quality

The quality of the seawater is also crucial because it affects the lifespan of the SWAC system. Seawater should be free from pollutants, sediments, and microorganisms that could cause corrosion or fouling of the components.

9.3 Currents

There are several types of data that can be used to characterize the current near the ocean shore, including:

- Tidal data: This includes information on the height and timing of tides, as well as the direction and strength of tidal currents.
- Current data: This type of data provides information on the direction and speed of ocean currents. Current meters can be deployed on buoys or on the seafloor to collect data over time.
- Satellite data: Remote sensing data from satellites can provide information on ocean surface currents, temperature, and sea level.

As an example, the figure below shows the current parameters that have been recorded for the last decade off the coast, in a given area. The following graph shows the occurrence of current speeds resulting from the data set.

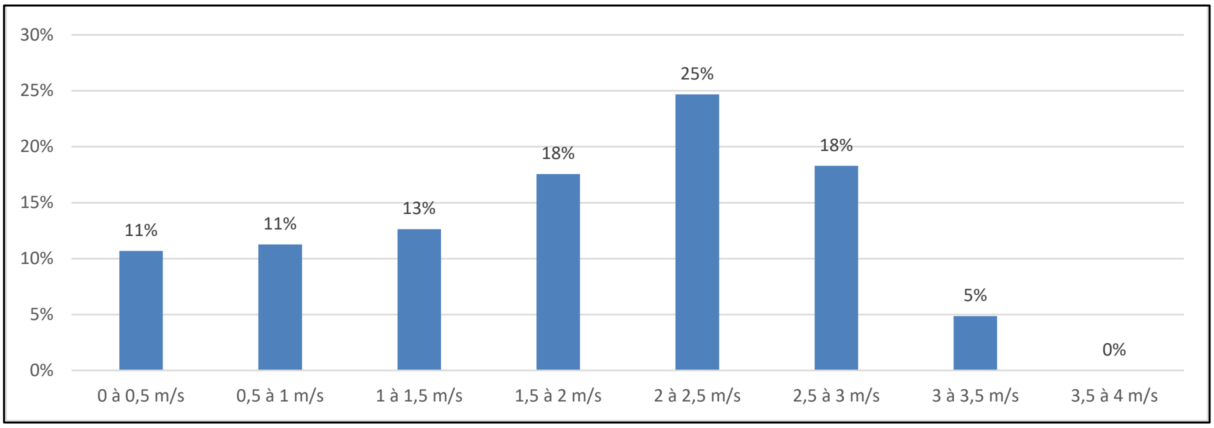

Figure 6 Current speeds occurrence in a given area

9.4 Water depth

The depth of the water where the intake is located will affect the temperature and quality of the seawater. When selecting a location for the intake, it's important to ensure that the seawater is deep enough to maintain cold temperatures. However, it's worth considering that a deeper location will result in longer pipelines and higher installation costs.

9.5 Waves

The strength and direction of waves can affect the flow rate of the seawater and depending on the water depth of the intake.

The strength and direction of the waves will also drive the stability hence the sizing of the ballast for the intake & discharge pipelines.

There are several characteristics of waves that are typically measured, including:

- Wave height is the vertical distance between the crest (highest point) and trough (lowest point) of a wave. Wave height is typically measured in meters.
- Wave period is the time it takes for two successive wave crests to pass a fixed point. Wave period is typically measured in seconds.
- Wave frequency is the number of waves passing a fixed point per unit time. Wave frequency is typically measured in cycles per second, or hertz (Hz).
- Wave direction is the direction from which the waves are coming. Wave direction is typically measured in degrees from true north.
- Wave energy is the amount of energy contained in a wave, which is related to its height, period, and frequency. Wave energy is typically measured in joules (J) or kilowatt-hours (kWh).
- Wave spectrum is a plot of the distribution of wave energy as a function of wave period and frequency. The wave spectrum provides a more detailed picture of the characteristics of the waves, which can be useful for predicting their behaviour and their effects on coastal areas.

Wave measurement is typically done using instruments such as wave buoys, wave staffs, or radar systems. These instruments can provide real-time data on wave characteristics.

The following graph shows, as an example, the main wave data that should be collected prior to designing a SWAC system. Wave direction is given in green, Hs observed is given in light blue, and mean Hs in dark blue. The green curve gives the wave direction.

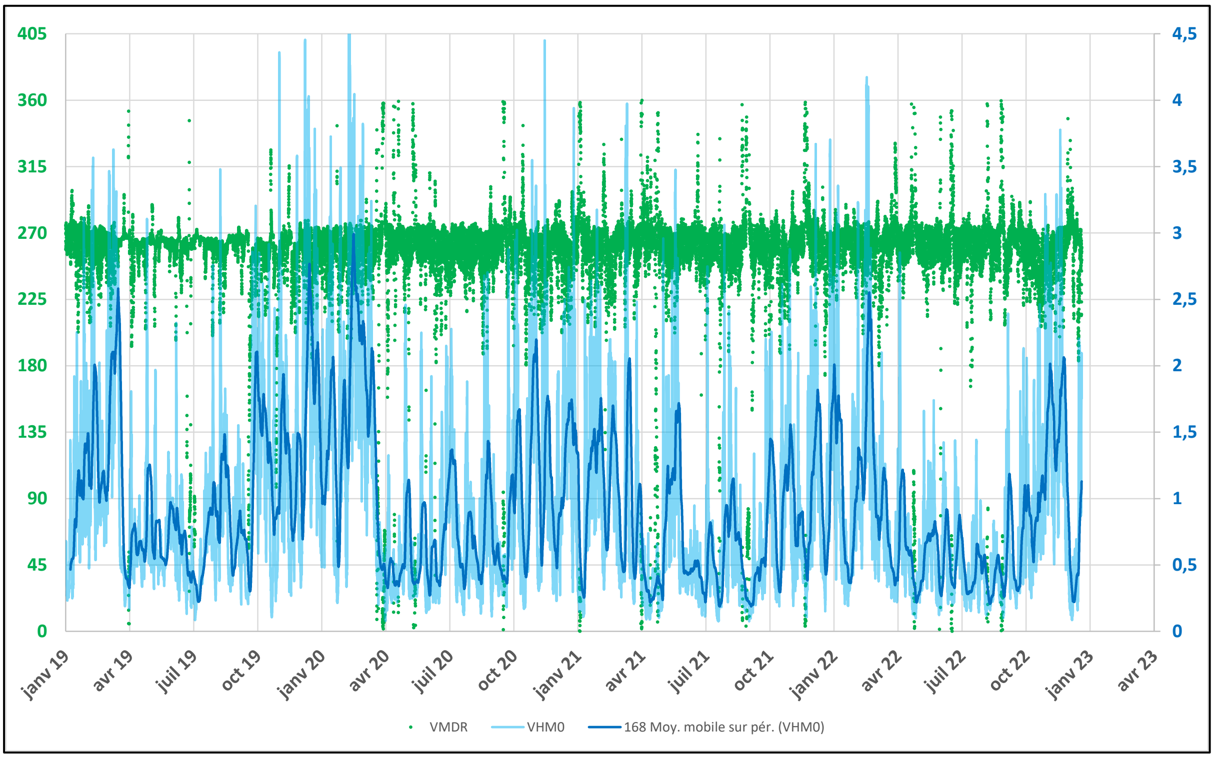

Figure 7 Wave significant height and direction observed in a given area between 2019 and 2023

Records data above have also shown that wave is monodirectional, going along the West-East axis.

11. Economic assessment

11.1 Energy efficiency

In order to assess the economic relevance of a SWAC system, it is necessary to know the cold consumption of the considered customer facility.

The figure below is an example of the cold consumption of the various processes of a customer facility.

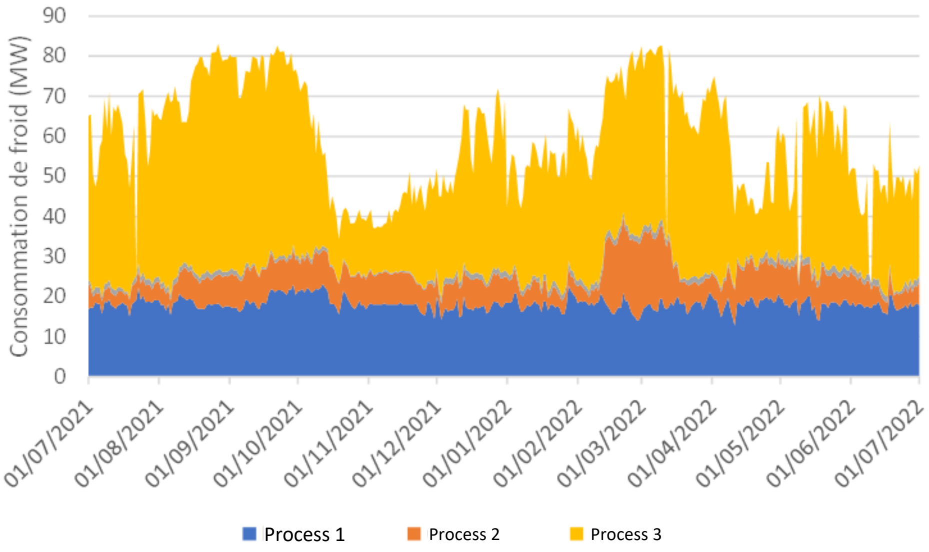

Figure 8 Thermal consumption of the customer facility (cold)

We observe that the thermal consumption (cold) of the site has a base load of 40 MW, and peaks up to more than 80 MW. The SWAC should be designed for the base and not for the peak.

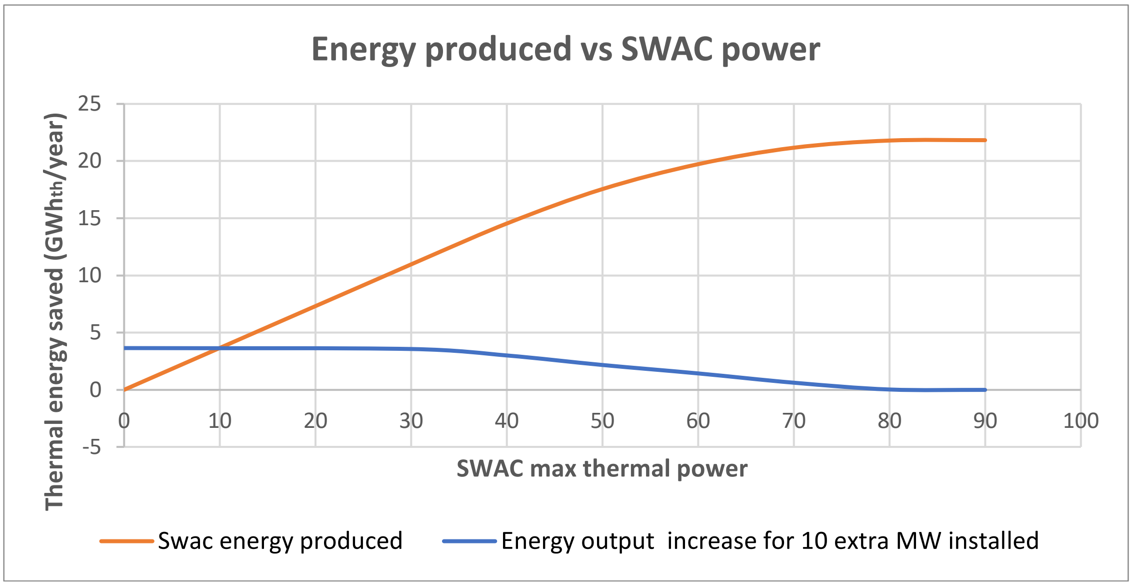

Figure 9 SWAC useful energy production according to its rated power

On above figure, every extra MW installed over 50 MW (i.e. increase in CAPEX) will generate a smaller increase in thermal energy saved.

On this example, the blue curve gives this marginal energy efficiency of 10 extra MW installed and the SWAC maximum thermal power should then be limited to 60 MW on the maximum.

11.2 Cost analysis

Performing a cost analysis for a (SWAC) project requires considering several factors that can impact the overall cost of the project. The general factors to consider include:

- Capital Costs incurred in setting up the SWAC system. It includes costs of equipment, installation, design and engineering, permitting, and construction.
- Operating Costs incurred in running the system. It includes costs of energy, maintenance, labour, repair.
- Environmental Costs to meet environmental regulations, such as waste disposal and emission controls.
- Land Costs for the acquisition and use of land for the project.
- Government Incentives than can be provided by local or national institutions to promote the use of renewable energy sources like a SWAC system.
- Project timelines as an uncontrolled duration of the project may impact the overall cost of the project.
- Maintenance costs incurred in repairing or replacing equipment, spare parts, or other components that are worn out or damaged over time.

For the 3 case studies exposed in this report and for the pump location options, the cost items that should be considered are the following:

- **Engineering / Project Management**
  - Project management, detailed design engineering, installation engineering
  - Process engineering / Permitting / Environmental / ITT
  - Geophysical and geotechnical study
- **Fabrication / Procurement / Transit to yard**
  - Procurement and transportation of pipelines
  - Procurement of seawater pumps and water turbine (S2)
  - Procurement of exchangers and associated equipment (according to solution)

- **Installation**
  - Excavation works onshore and backfilling when necessary.
  - Towing of pipeline sections from construction site
  - Procurement, transportation and storage of concrete collars and additional ballast
  - Procurement of eco-design ballast
  - Procurement Tie-in spools and sealed flanges
  - Preparation and connection of pipe sections at construction site
  - Installation of concrete collars along pipeline sections
  - Route definition and marking with buoys (divers + supply vessel)
  - Seabed preparation along the route (including mobilization of supply vessel and divers/ROV to install ballast structures to improve soil stabilization power and/or to remove obstructing object)
  - Installation of pipeline section down to seabed (preparation of dead weights + pipeline sinking + deployment of additional & eco-design ballast)

- **Pump System Installation (according to selected pump location)**

By considering all the above exposed factors, a comprehensive cost analysis of a SWAC project can be made in order to allow an informed decision about its feasibility and profitability.

12. Pros and cons of the 3 solutions

This section describes the Pros & Cons of the three SWAC design cases studied and the two location options for the main pump system (subsea pumps or into deep well), based on the following criteria:

- Installation feasibility and Operation
- Cost

12.1 Solution 1

SOLUTION 1		
CRITERIA	**PROS**	**CONS**
INSTALLATION / OPERATION	Moderate excavation means required and reduced digging works (only open trenches)	
	Efficient cooling system as plant heat exchanger is directly supplied in cooled seawater.	Risk of vacuum inside pipe system.
COST	Moderate installation cost and procurement cost for pumping system	
	Best coefficient of performance for this solution	

Table 5 Solution 1 pros & cons

12.2 Solution 2

SOLUTION 2		
CRITERIA	**PROS**	**CONS**
INSTALLATION / OPERATION	Integrated water turbine to recover some energy from seawater discharge pipeline	
		Heavy design for pump to be considered due to the presence of water turbine
COST	Moderate installation costs	Expensive procurement cost expected for the heavy design pump (and water turbine with associated energy converter)
		Additional excavation works
		Solution with the lowest coefficient of performance (despite water turbine recovering some energy)

Table 6 Solution 2 pros & cons

12.3 Solution 3

SOLUTION 3		
CRITERIA	**PROS**	**CONS**
INSTALLATION / OPERATION	Low capacity requirements for seawater pump (in case it is installed subsea, easy to recover by divers for inspection)	Lower thermal power of the system because of the 2 series heat exchangers (plant exchanger & tubular exchanger)
	No need of an additional pump dedicated to branch circuit	
COST	Moderate excavation works	Procurement of tubular heat exchanger
	Cheapest solution for installation works and procurement of pumping system	
	Satisfying coefficient of performance	

Table 7 Solution 3 pros & cons

13. Project planning

A general overview of the typical planning process for a SWAC project from customer requirements analysis to commissioning is given below:

- **Customer Requirements Analysis**: The first step is to understand the customer's requirements for the SWAC system. This includes the cooling capacity required, the location of the system, the water temperature and quality, and any other specific needs or constraints.
- **Feasibility Study**: Once the requirements are understood, a feasibility study is conducted to determine the technical and economic feasibility of the project. This includes a site survey, a technical analysis of the system design, and a financial analysis to determine the cost-effectiveness of the project.
- **Design Phase**: Based on the results of the feasibility study, the detailed design of the SWAC system is developed. This includes the selection of equipment, such as pumps, heat exchangers, and cooling towers, and the design of the piping and control systems.
- **Procurement**: The equipment and materials required for the project are procured from vendors.
- **Construction**: The SWAC system is built according to the design and specifications developed in the previous phases. This includes the installation of the equipment, piping, and control systems.
- **Testing and Commissioning**: Once the system is built, it is tested to ensure that it meets the design specifications and customer requirements. This includes performance testing, commissioning of the control systems, and any necessary adjustments to optimize the system's performance.
- **Handover and Operation**: Once the system has been tested and commissioned, it is handed over to the customer for operation. This includes training for the customer's personnel on the operation and maintenance of the system.

14. Test and commissioning of the system

A SWAC system requires careful testing and commissioning before it can be started. The following are some of the tests and commissioning tasks that should be performed prior to starting a SWAC system:

- Pre-commissioning checks: This includes a thorough inspection of the system to ensure that all equipment and components are installed correctly and in accordance with the design specifications. Any defects or damage should be identified and repaired before proceeding.
- Water quality testing: The quality of seawater used in the SWAC system is critical to its performance. Water quality tests should be conducted to ensure that the water meets the required specifications for temperature, salinity, and other parameters.
- Electrical testing: Electrical tests should be performed to ensure that all electrical components, including motors, pumps, and controllers, are functioning correctly and safely.
- Control system testing: The control system of the SWAC system should be tested to ensure that it is functioning correctly and that all control sequences are operating as intended.

- Performance testing: Once all of the pre-commissioning checks have been completed, the system should be tested to verify its performance. This includes testing the cooling capacity, power consumption, and other parameters to ensure that the system is operating within the design specifications.
- Commissioning documentation: Finally, all commissioning tasks and results should be documented in a commissioning report. This report should include all test results, any defects or issues identified, and any corrective actions taken to resolve them.

It is important to note that the specific tests and commissioning tasks required for a SWAC system may vary depending on the system design, local regulations, and other factors. It is recommended to consult with the system designer or a qualified commissioning agent to develop a commissioning plan specific to the system being installed.

15. Maintenance and monitoring

To ensure the efficient operation of a seawater air conditioning (SWAC) system, it is important to establish a regular maintenance and monitoring program and to follow the manufacturer's recommendations and industry best practices. Some of the key maintenance and monitoring tasks are the following:

- Regular cleaning: The heat exchangers, evaporators, and other components of the SWAC system can accumulate fouling and marine growth over time. Regular cleaning (notably the strainer) of these components is necessary to maintain the system's efficiency and prevent corrosion.
- Water quality monitoring: The quality of seawater can affect the system's efficiency and reliability. Its monitoring should be performed regularly to ensure that it meets the required specifications and that the system is not being affected by factors such as algae blooms, turbidity, or pollution.
- Electrical and control system: Electrical components and control system should be checked regularly to ensure that they are functioning correctly and safely. Any issues should be identified and repaired promptly.
- Performance monitoring: The system's performance must be permanently monitored, including cooling capacity, power consumption, and other key parameters, to help identifying any trends or issues that may affect the system's efficiency or reliability.
- Maintenance of pumps and other mechanical equipment: The pumps, motors, and other mechanical equipment used in the SWAC system should be maintained regularly to ensure that they are operating efficiently and to prevent breakdowns.
- System optimization: Over time, changes in the operating conditions, such as changes in the seawater temperature, may affect its efficiency. Regular optimization of the system, including adjustments to the control system and other parameters, can help maintain its efficiency over time.

16. Appendix – General Arrangement

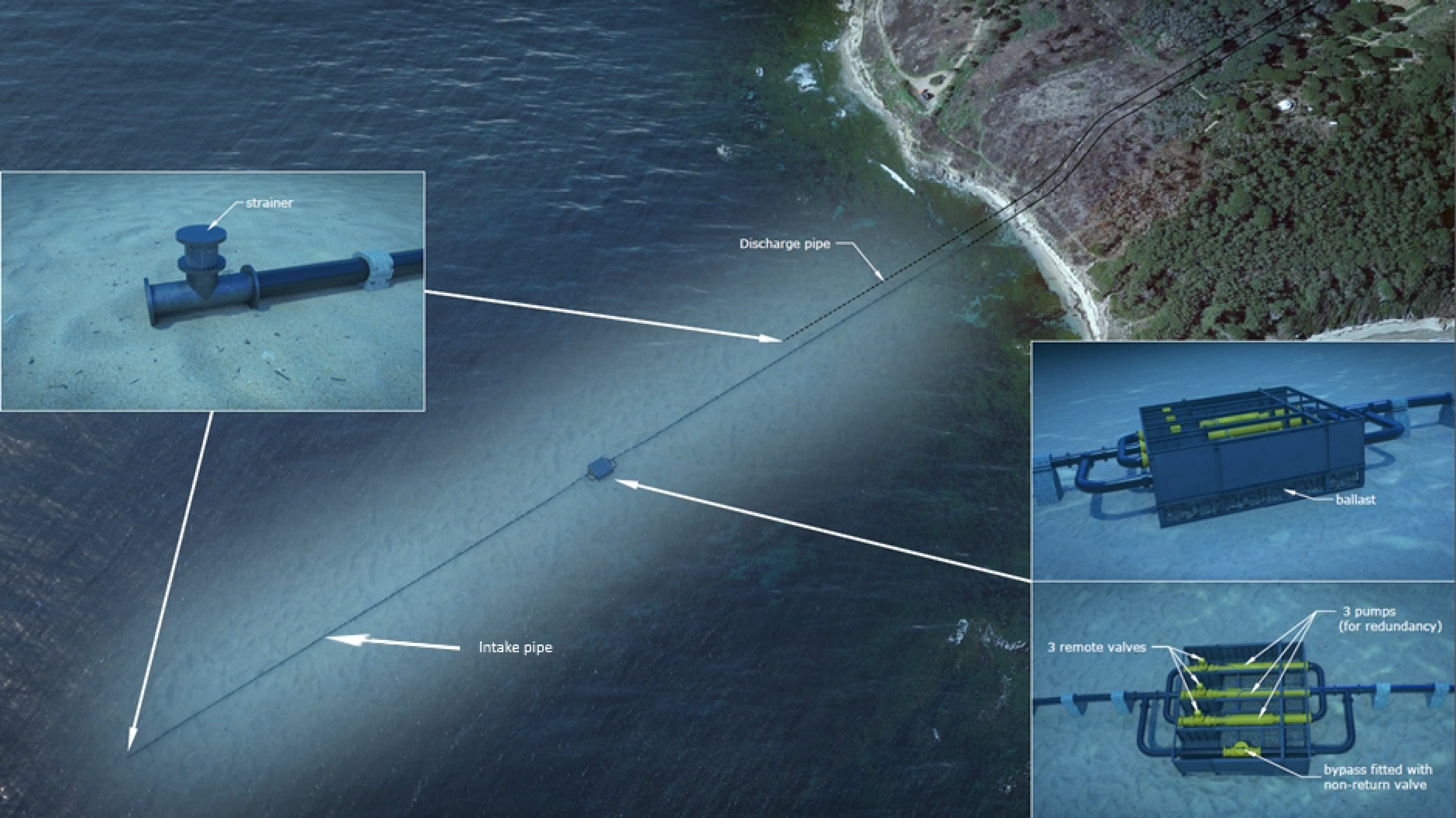
strainer
Discharge pipe
Intake pipe
ballast
3 pumps
(for redundancy)
3 remote valves
bypass fitted with
non-return valve

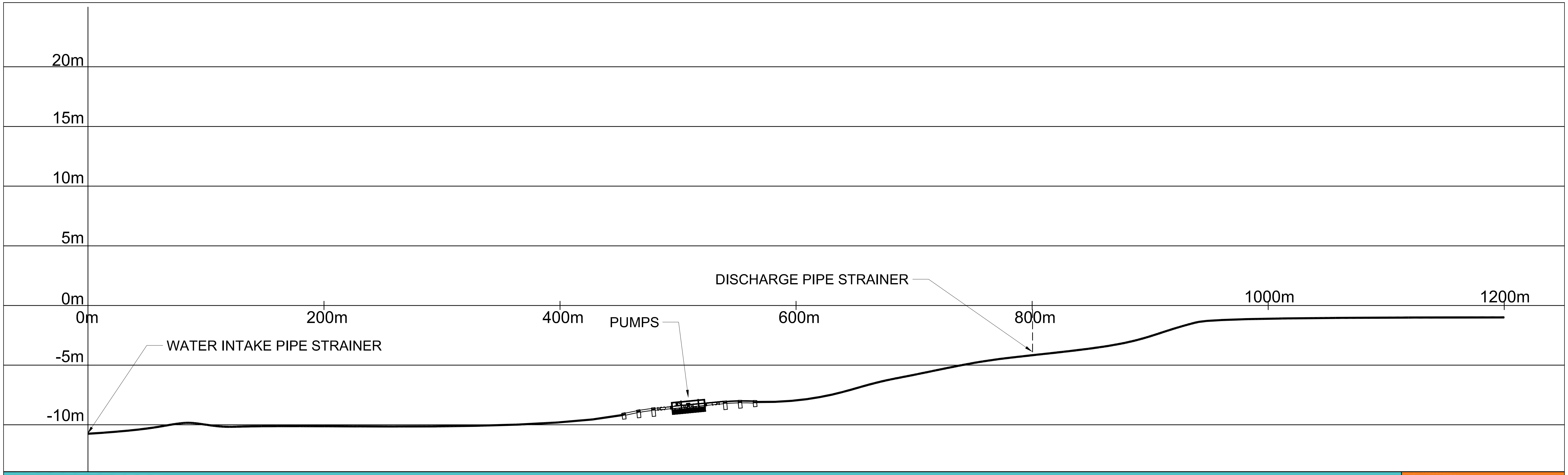

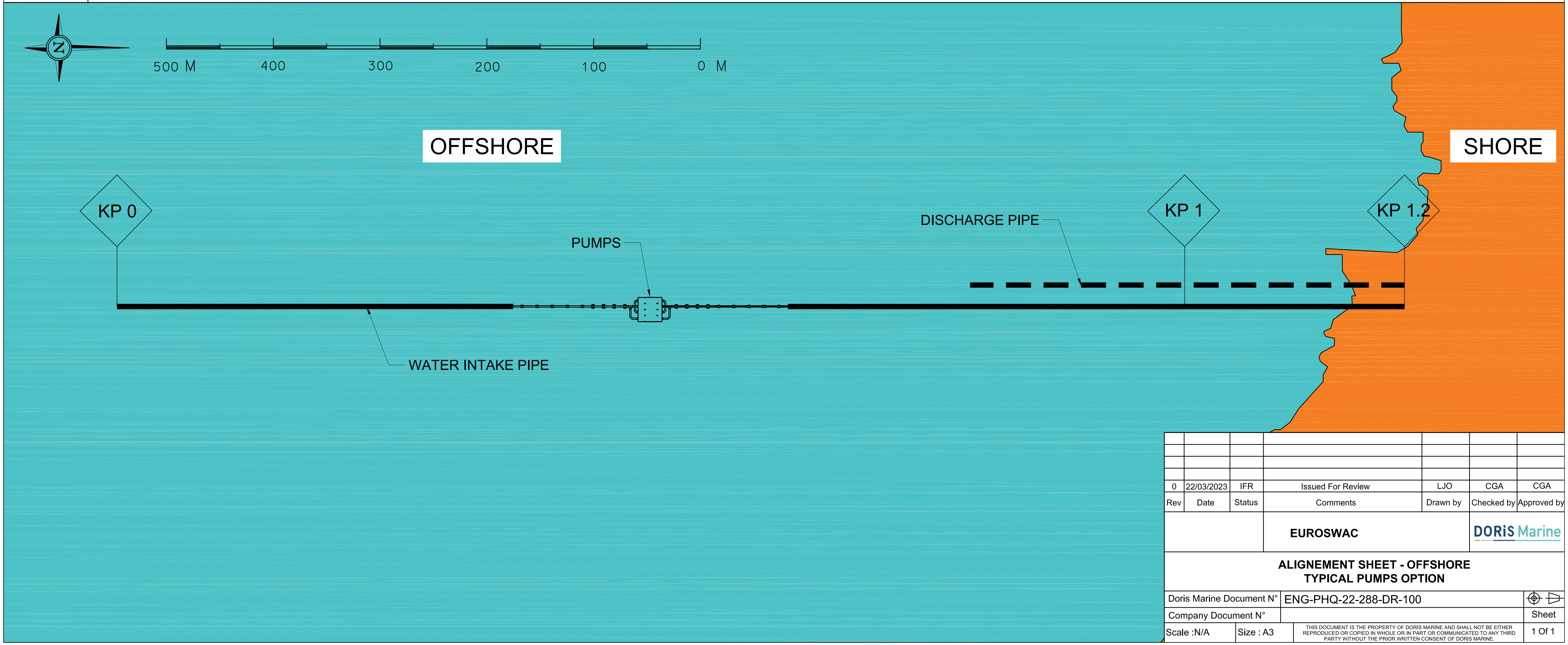

0	22/03/2023	IFR	Issued For Review	LJO	CGA	CGA
Rev	Date	Status	Comments	Drawn by	Checked by	Approved by

EUROSWAC

ALIGNEMENT SHEET - OFFSHORE
TYPICAL PUMPS OPTION

Doris Marine Document N°	ENG-PHQ-22-288-DR-100	
Company Document N°		Sheet
Scale :N/A	Size : A3	1 Of 1

TOP VIEW

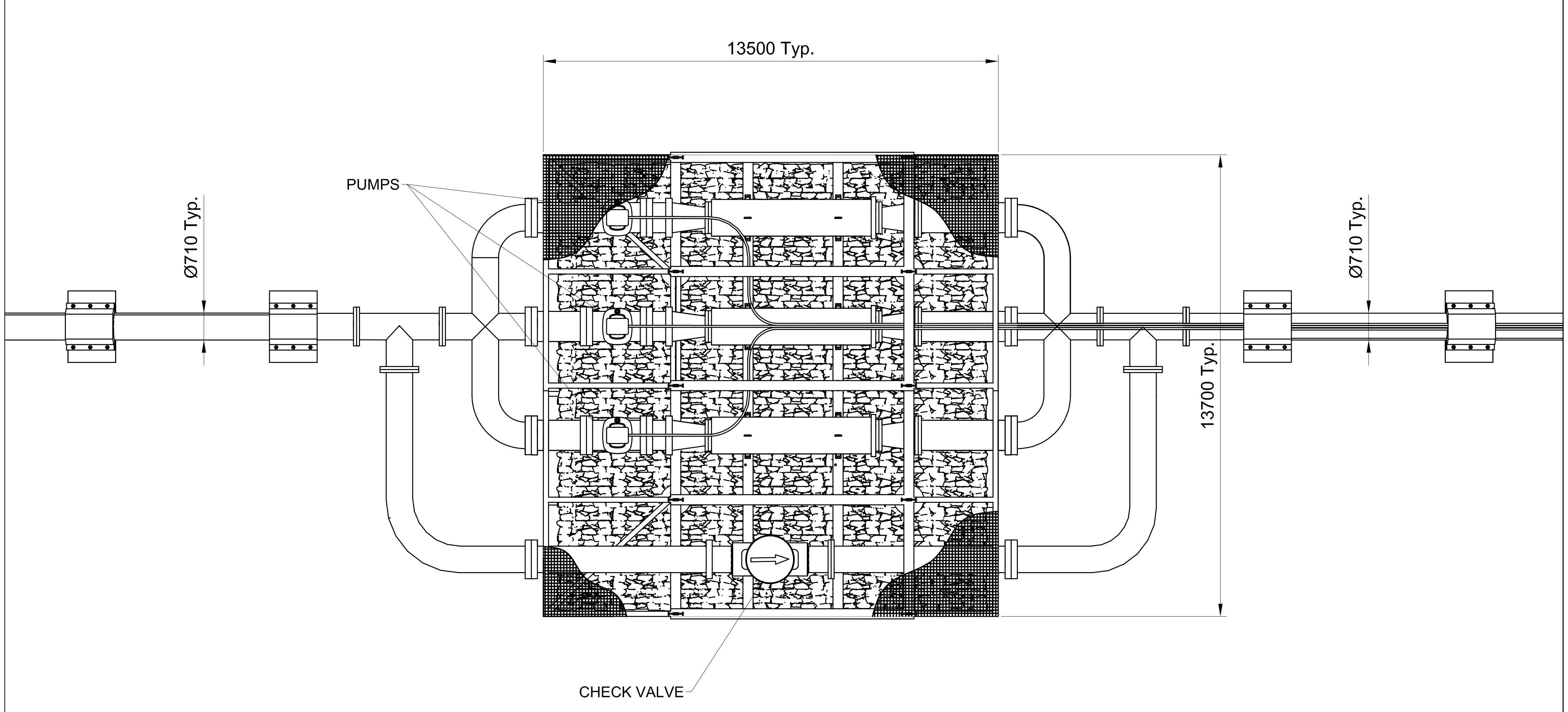

3D VIEW

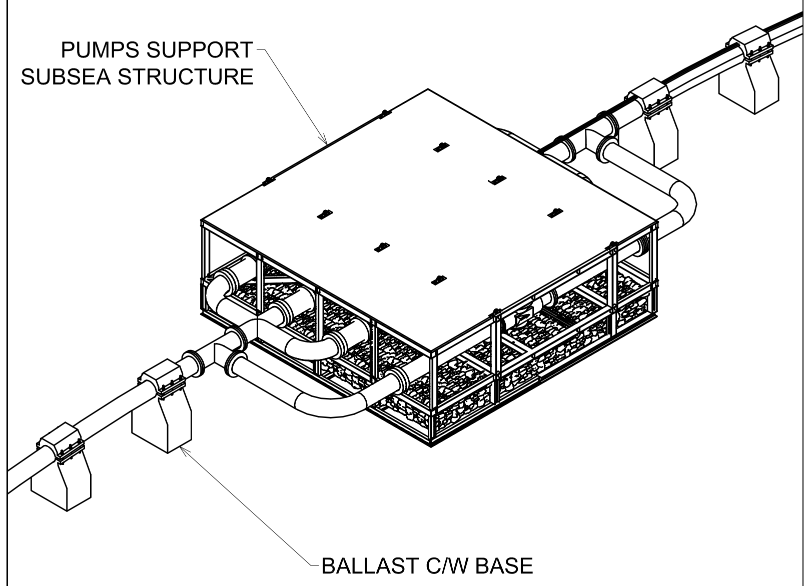

ELEVATION VIEW

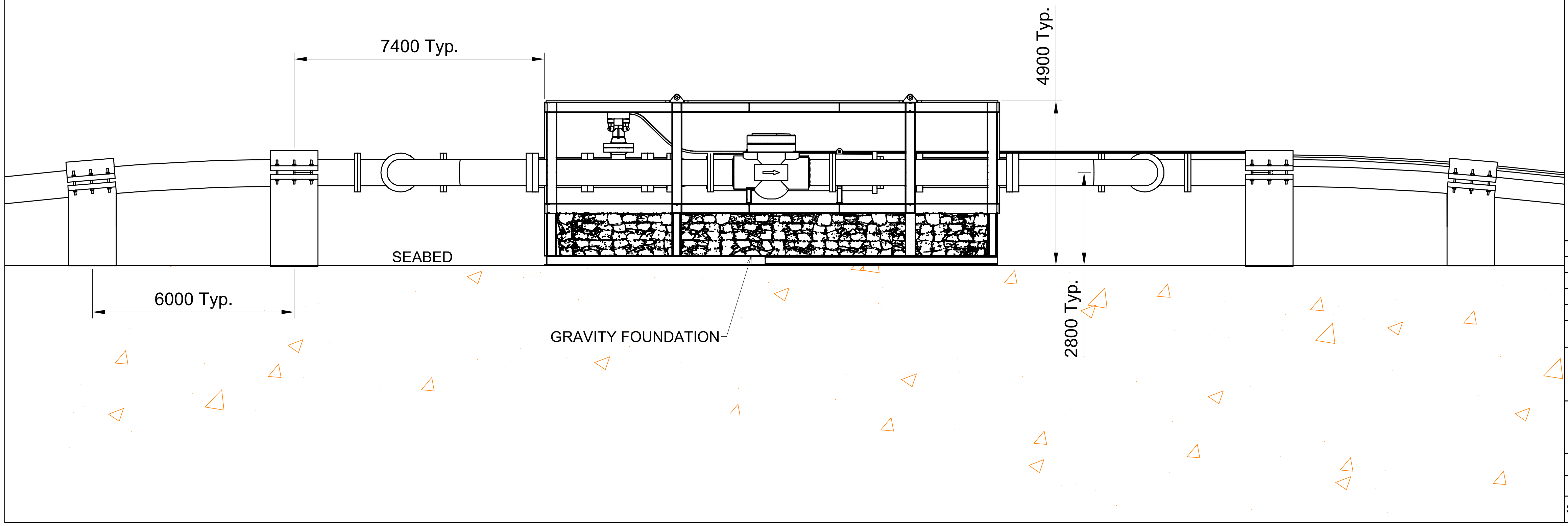

0	23/03/2023	IFR	Issued For Review	LJO	CGA	CGA
Rev	Date	Status	Comments	Drawn by	Checked by	Approved by

EUROSWAC

PUMP SUPPORT STRUCTURE WITH GRAVITY FOUNDATION
TYPICAL PUMPS OPTION

Doris Marine Document N°	ENG-PHQ-22-288-DR-101	
Company Document N°		Sheet
Scale :N/A	Size : A3	1 Of 1

FRONT VIEW

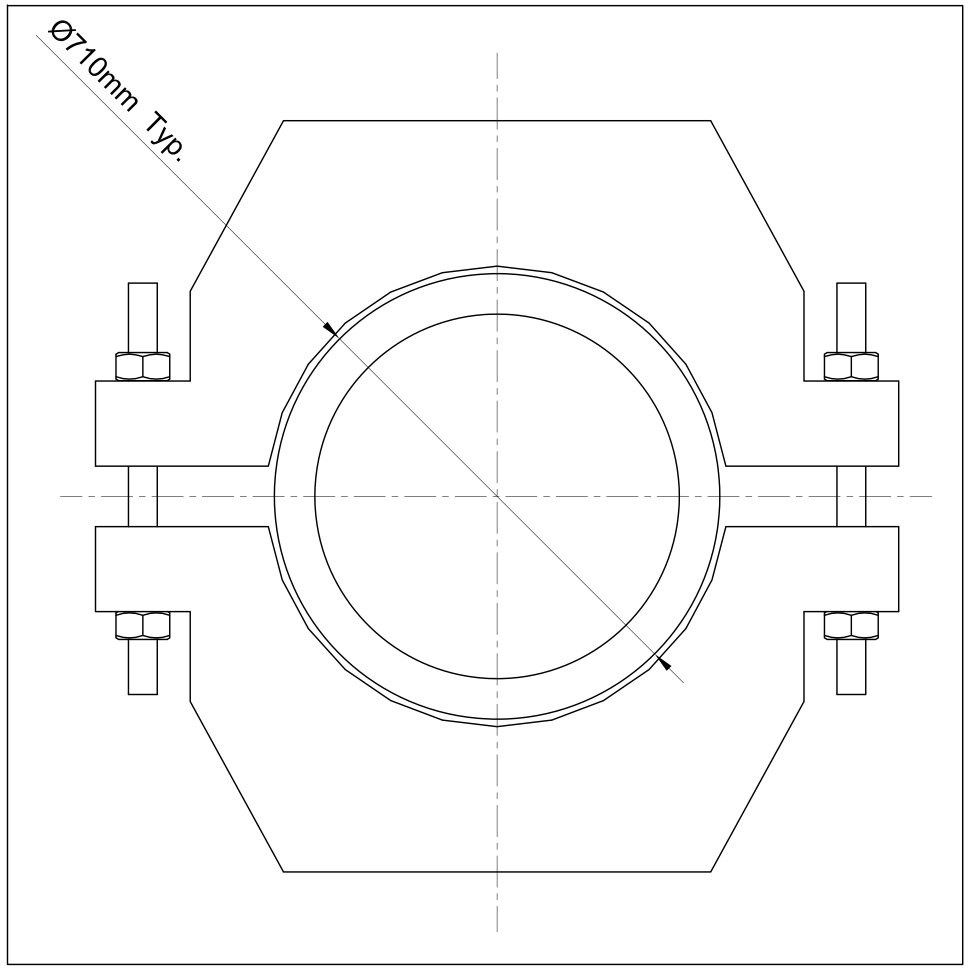

ISO VIEW

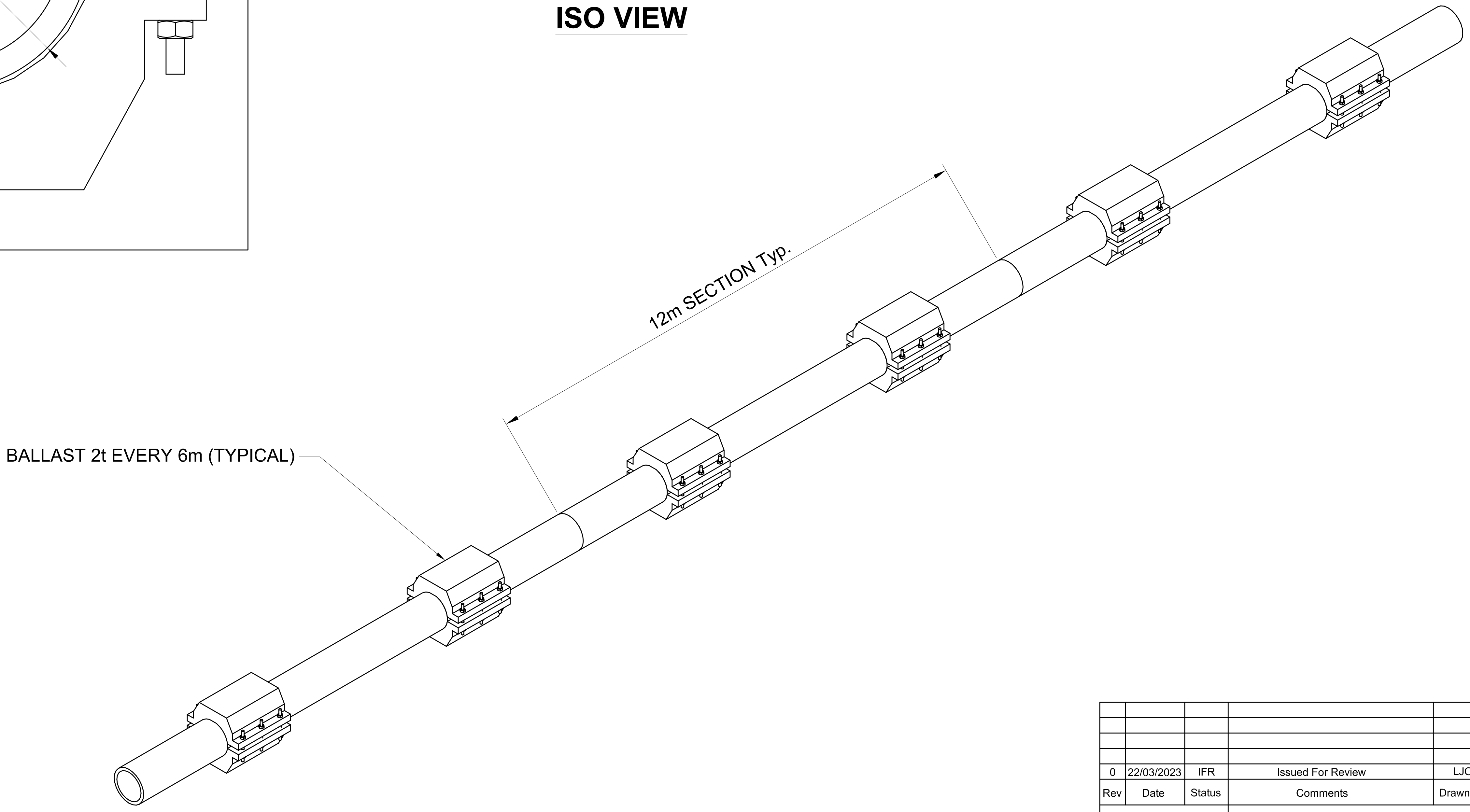

Rev	Date	Status	Comments	Drawn by	Checked by	Approved by
0	22/03/2023	IFR	Issued For Review	LJO	CGA	CGA

EUROSWAC

DORiS Marine

PIPE HDPE Ø710
TYPICAL DRAWING

Doris Marine Document N° ENG-PHQ-22-288-DR-102

Company Document N°

Sheet 1 Of 1

Scale :N/A

Size : A3

TOP VIEW

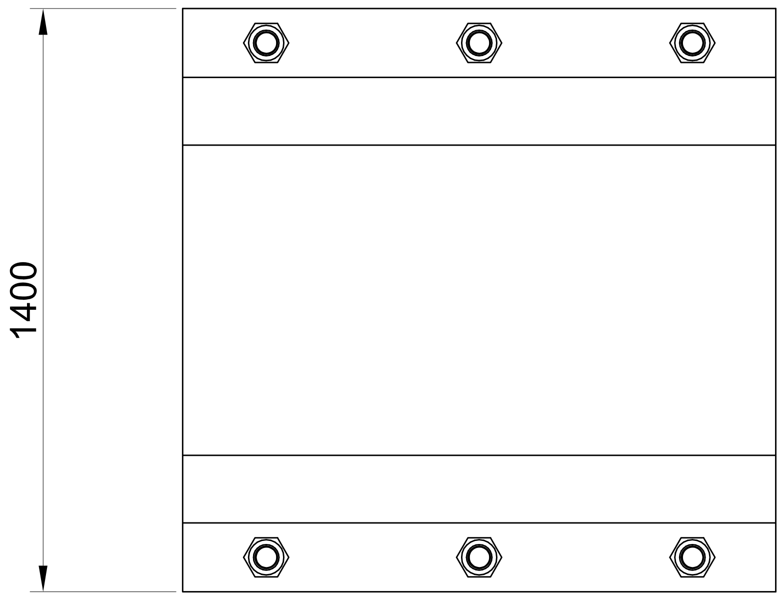

3D VIEW

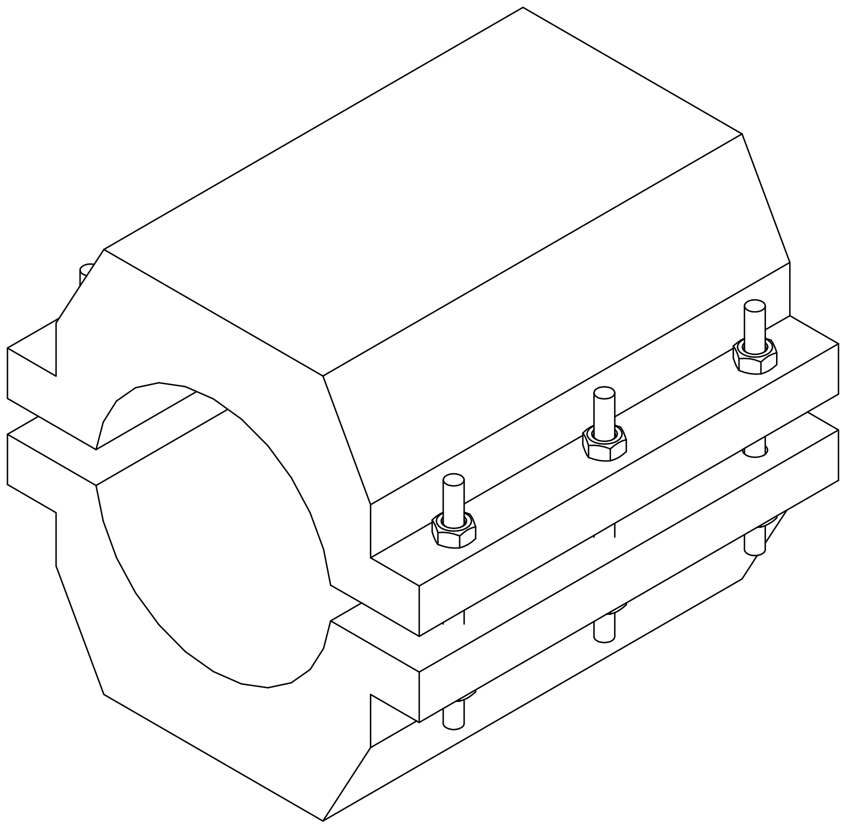

WEIGHT: 2T

SIDE VIEW

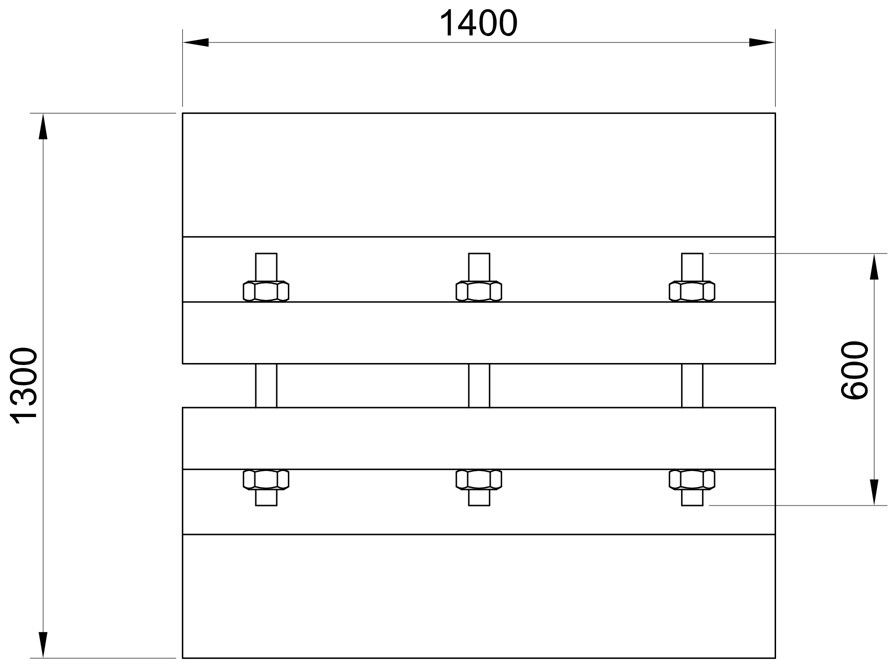

FRONT VIEW

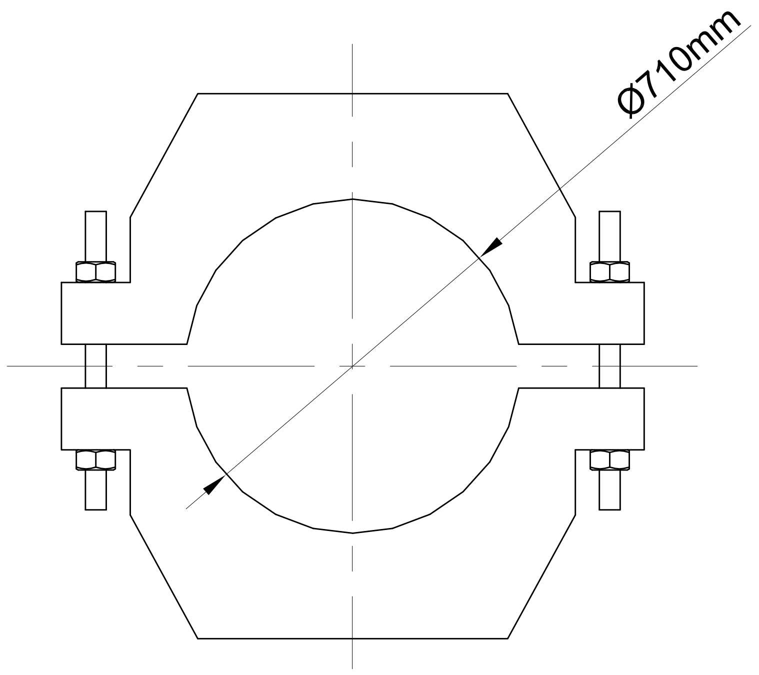

0	22/03/2023	IFR	Issued For Review	LJO	CGA	CGA
Rev	Date	Status	Comments	Drawn by	Checked by	Approved by

EUROSWAC

DORiS Marine

TYPICAL BALLAST
FOR PIPE Ø710

Doris Marine Document N°	ENG-PHQ-21-288-DR-103	
Company Document N°		Sheet
Scale :N/A	Size : A3	1 Of 1

TOP VIEW

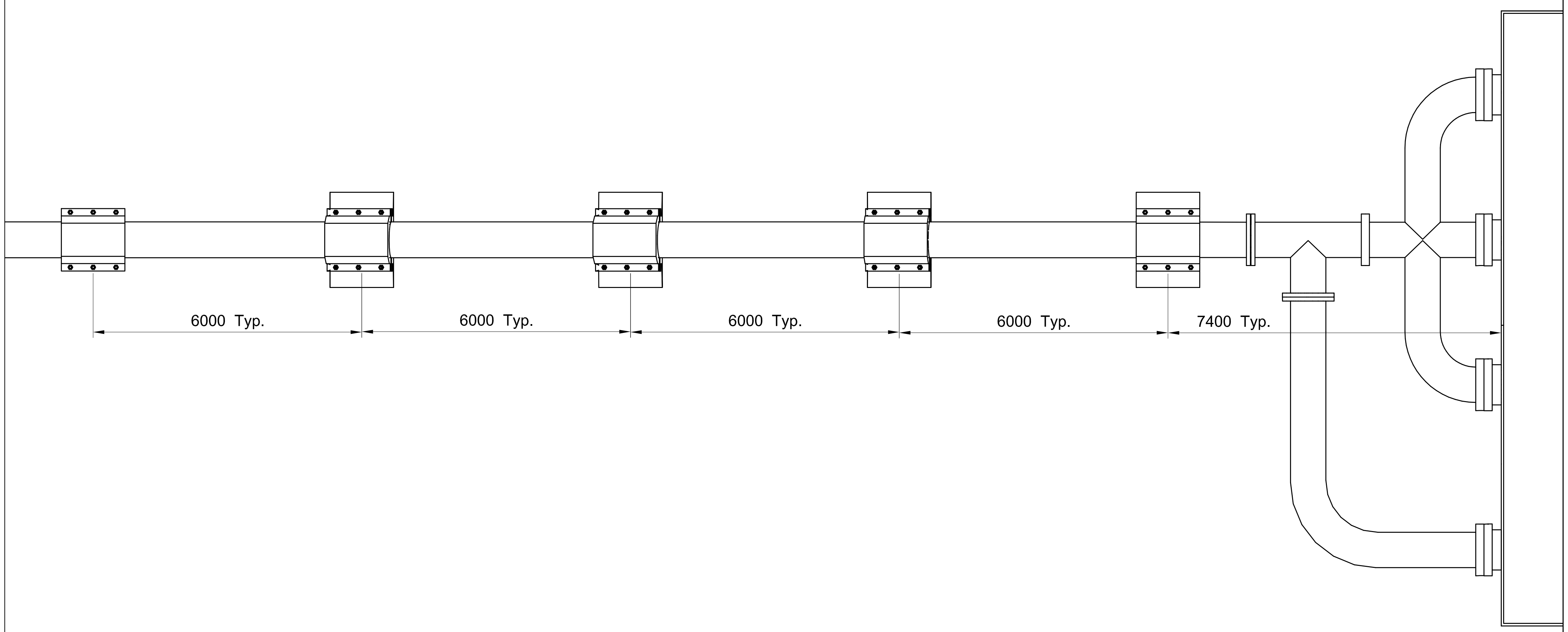

SIDE VIEW

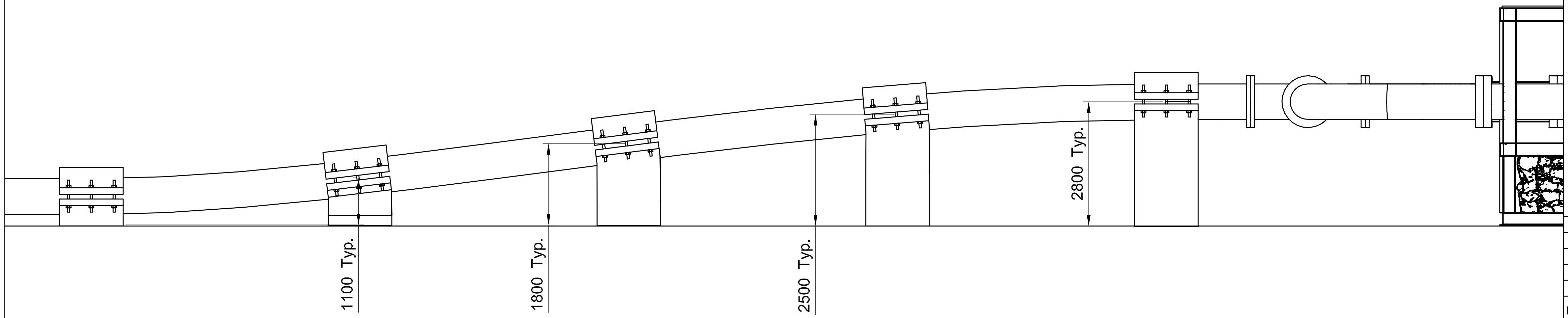

3D VIEW

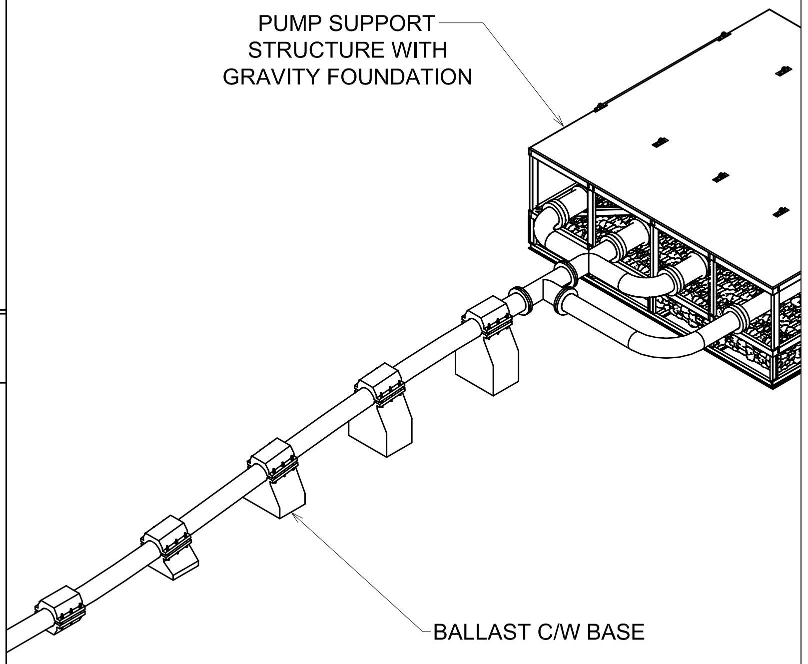

Rev	Date	Status	Comments	Drawn by	Checked by	Approved by
0	22/03/2023	IFR	Issued For Review	LJO	CGA	CGA

EUROSWAC

TYPICAL BALLAST
FOR PIPE Ø710 C/W BASE

Doris Marine Document N°	ENG-PHQ-21-288-DR-104	
Company Document N°		Sheet
Scale :N/A	Size : A3	1 Of 1

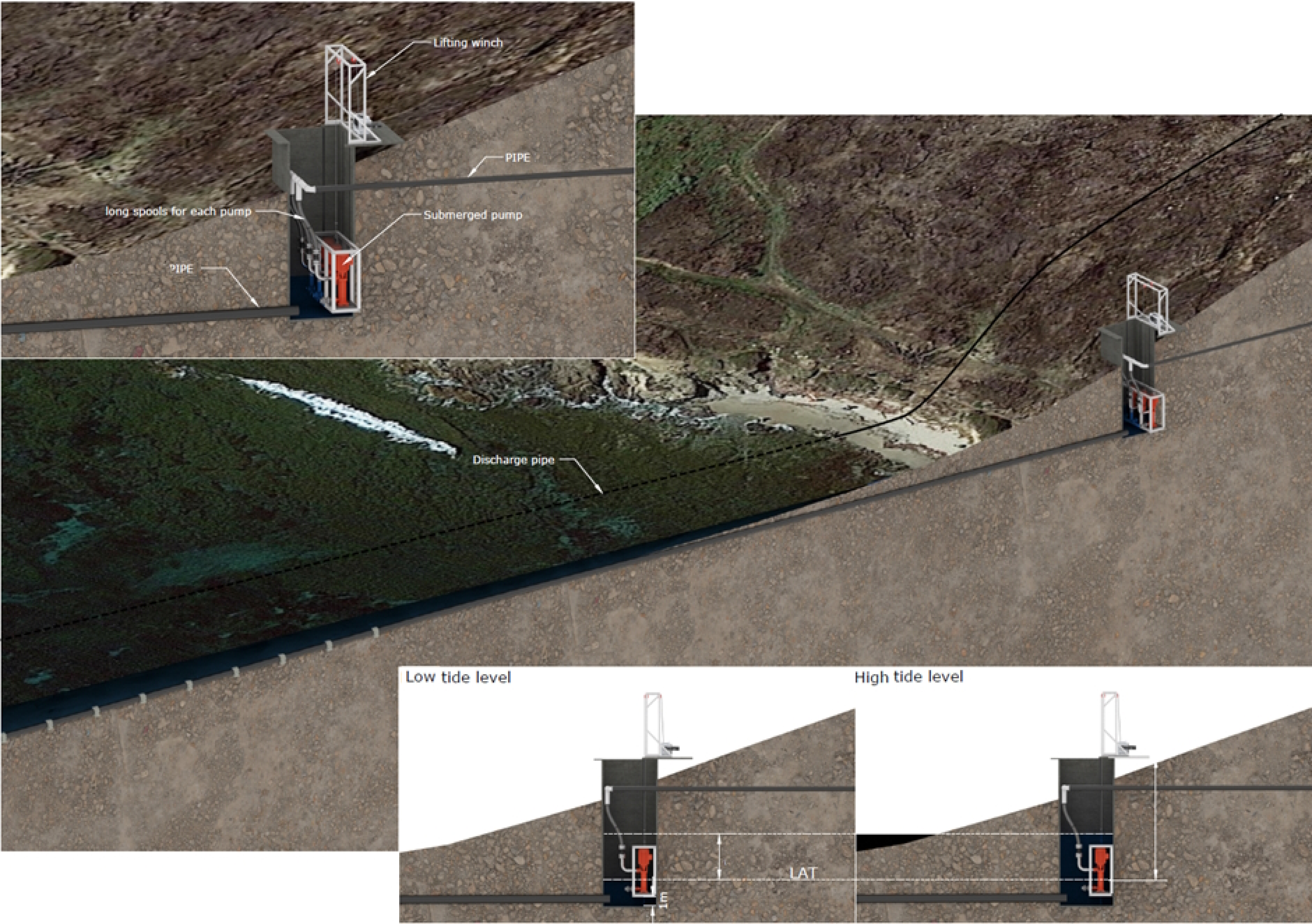
Lifting winch
PIPE
long spools for each pump
Submerged pump
PIPE
Discharge pipe
Low tide level
High tide level
LAT
1m

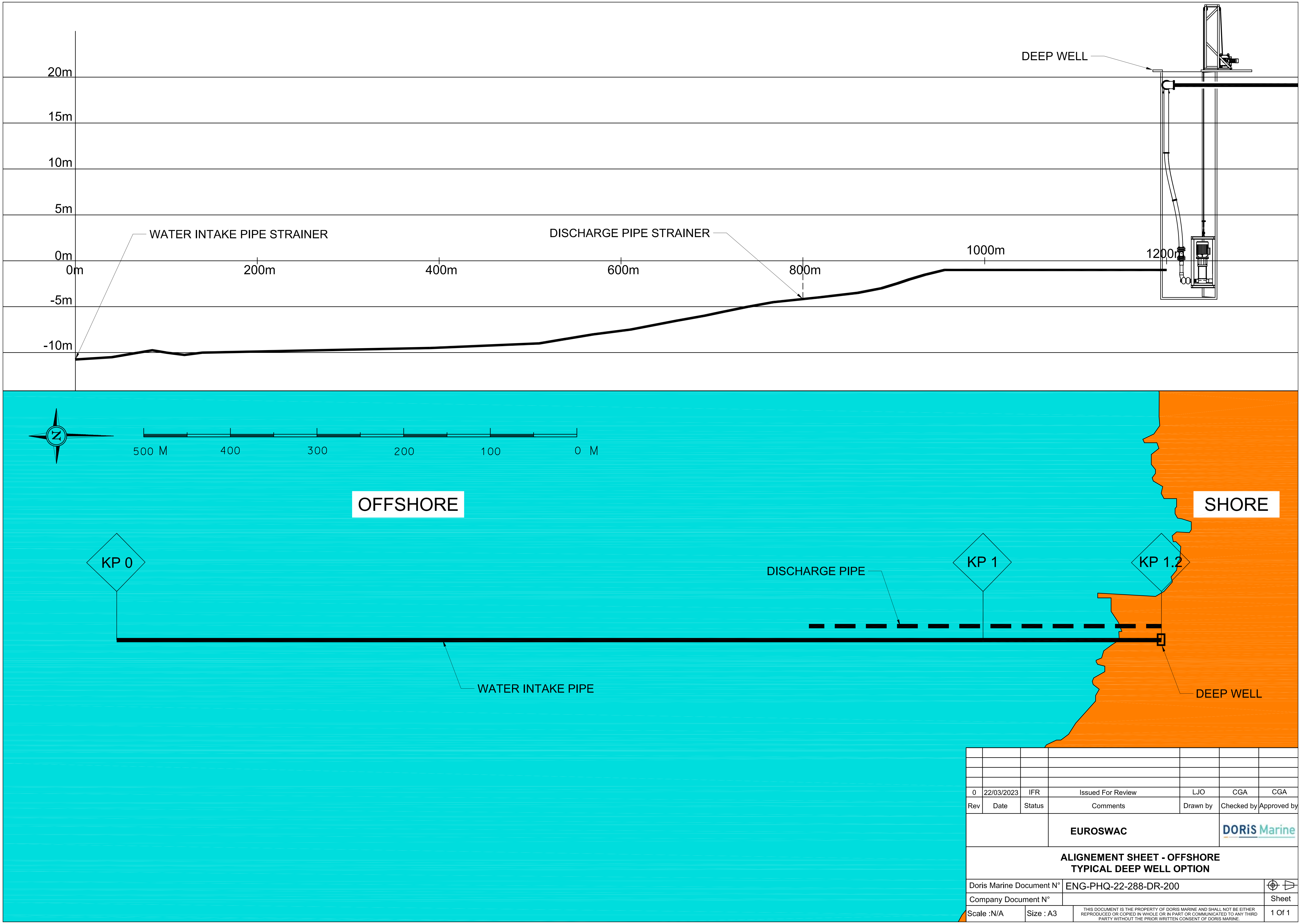

0	22/03/2023	IFR	Issued For Review	LJO	CGA	CGA
Rev	Date	Status	Comments	Drawn by	Checked by	Approved by

EUROSWAC

DORiS Marine

ALIGNEMENT SHEET - OFFSHORE
TYPICAL DEEP WELL OPTION

Doris Marine Document N°	ENG-PHQ-22-288-DR-200	
Company Document N°		Sheet
Scale :N/A Size : A3		1 Of 1

TOP VIEW

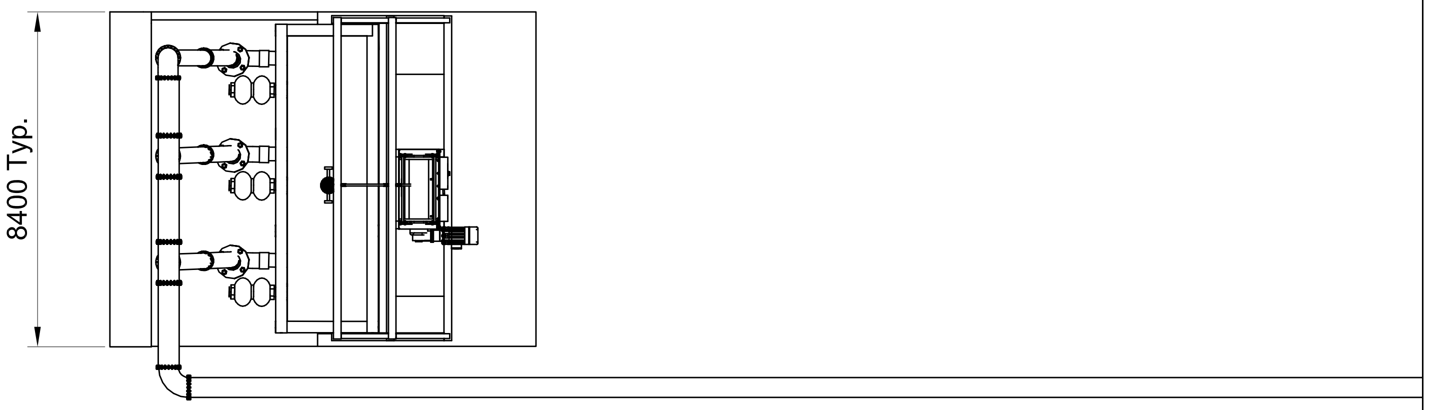

ELEVATION VIEW

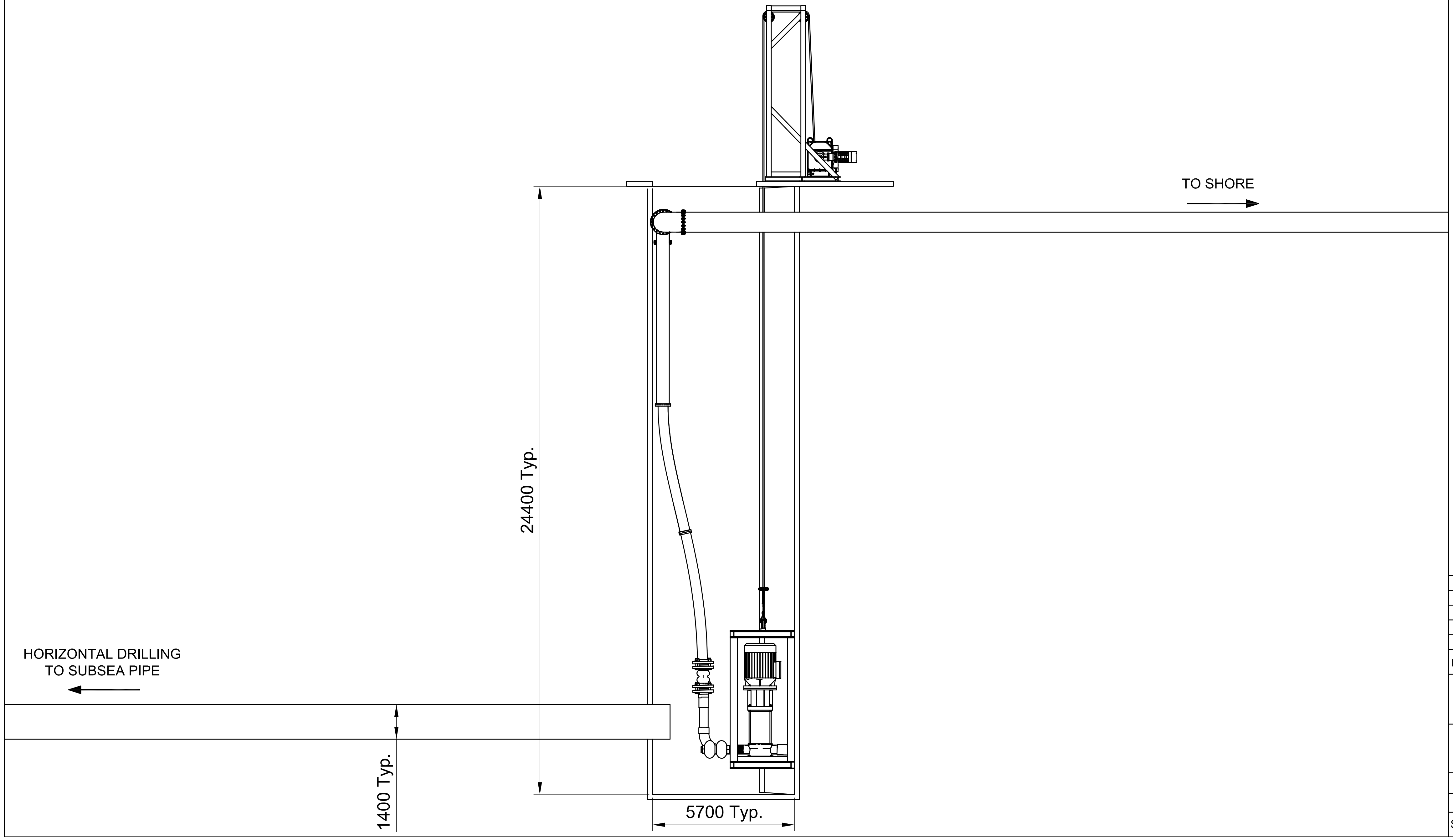

3D VIEW

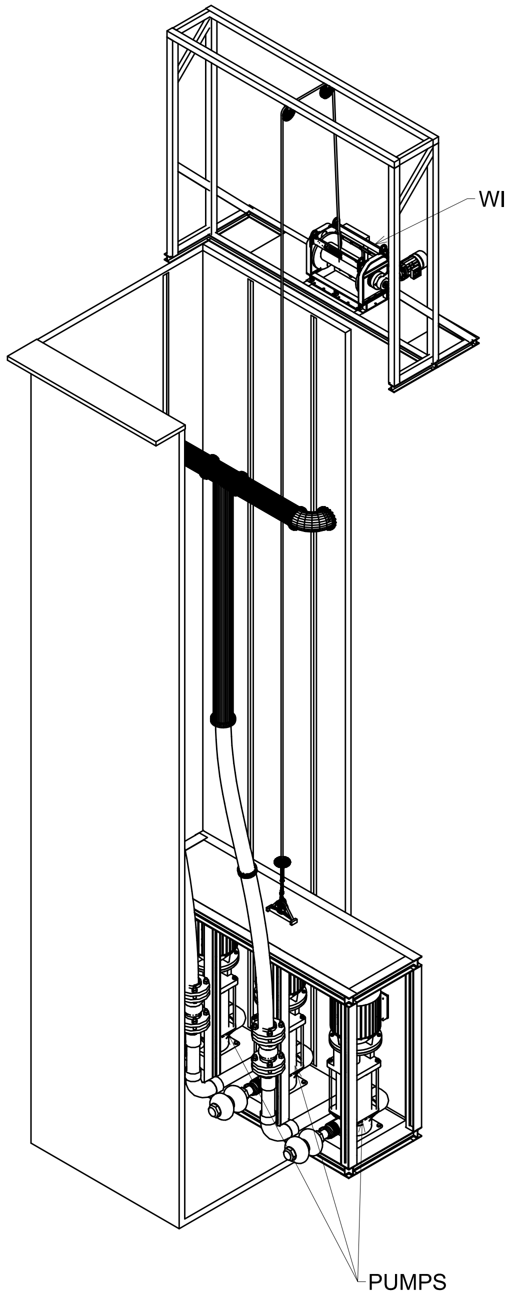

0	22/03/2023	IFR	Issued For Review	LJO	CGA	CGA
Rev	Date	Status	Comments	Drawn by	Checked by	Approved by

EUROSWAC

DORiS Marine

TYPICAL - DEEP WELL

Doris Marine Document N°	ENG-PHQ-21-288-DR-201	
Company Document N°	HOLD	Sheet
Scale :N/A Size : A3		1 Of 1

FRONT VIEW

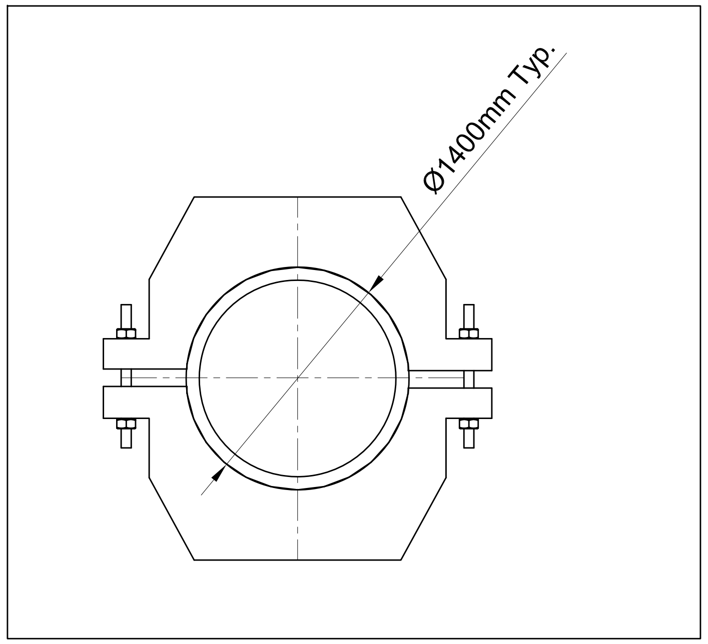

ISO VIEW

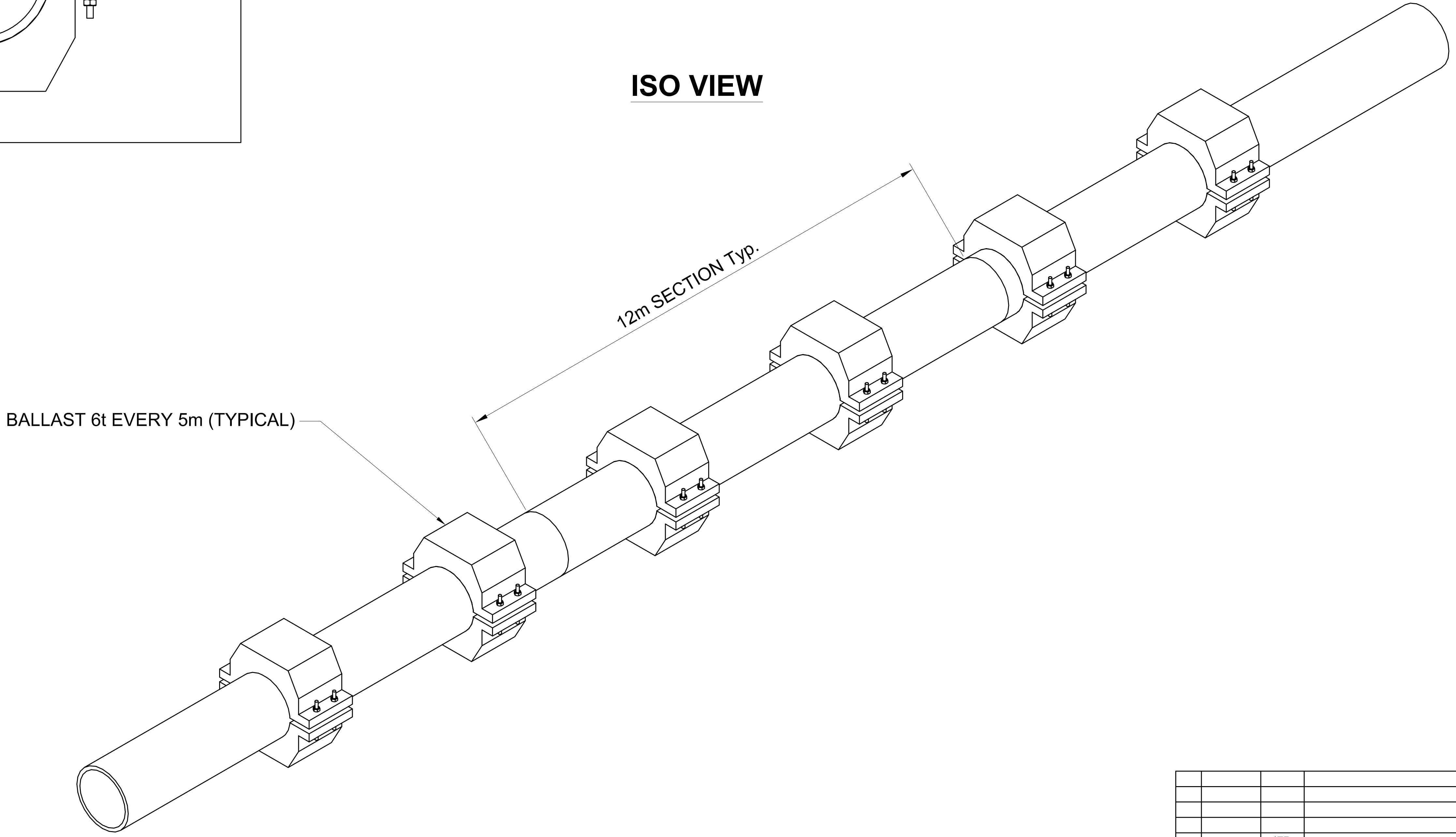

0	22/03/2023	IFR	Issued For Review	LJO	CGA	CGA
Rev	Date	Status	Comments	Drawn by	Checked by	Approved by

EUROSWAC

DORiS Marine

PIPE HDPE Ø1400
TYPICAL DRAWING

Doris Marine Document N° ENG-PHQ-22-288-DR-202
Company Document N°
Sheet 1 Of 1
Scale :N/A
Size : A3

TOP VIEW

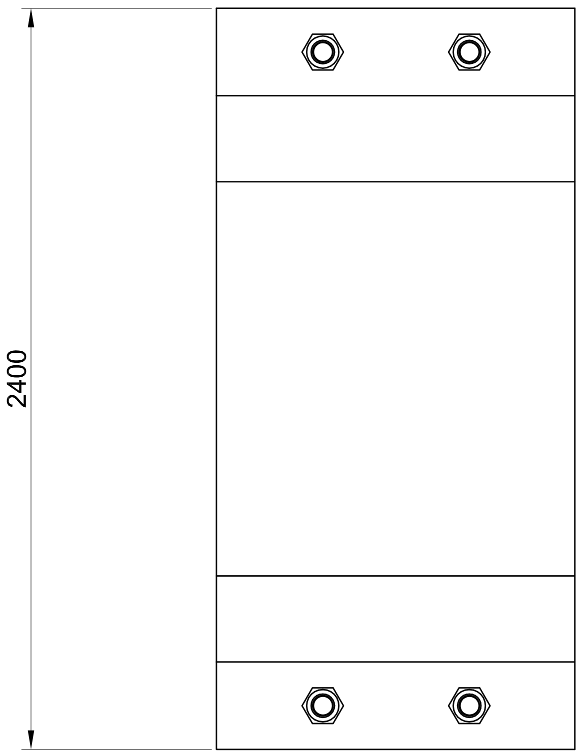

3D VIEW

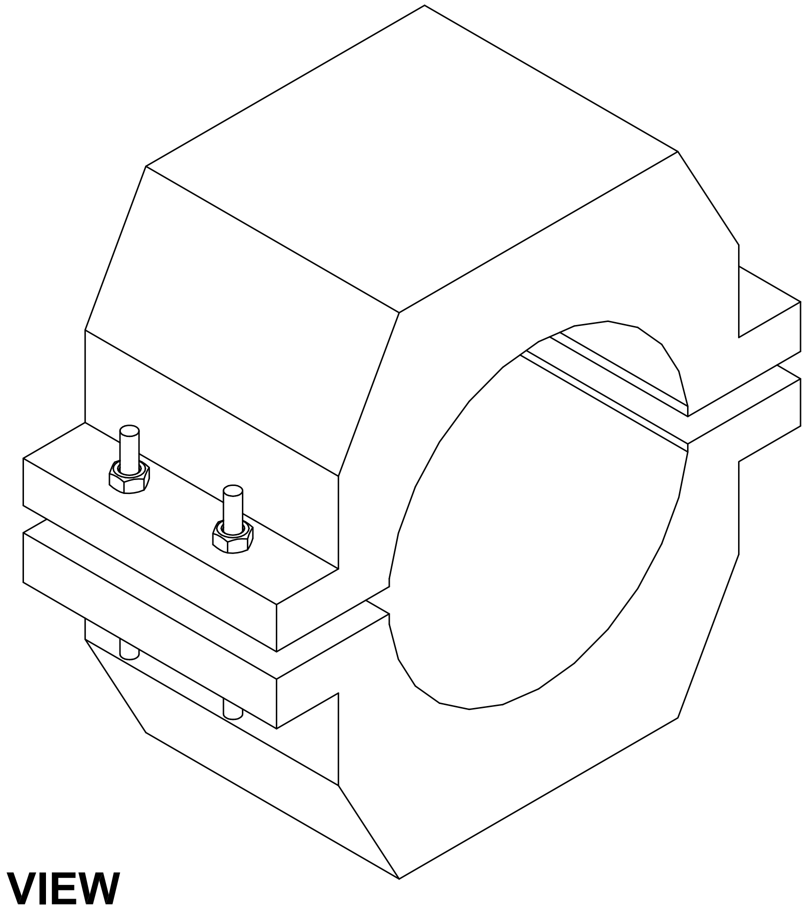

WEIGHT: 6T

SIDE VIEW

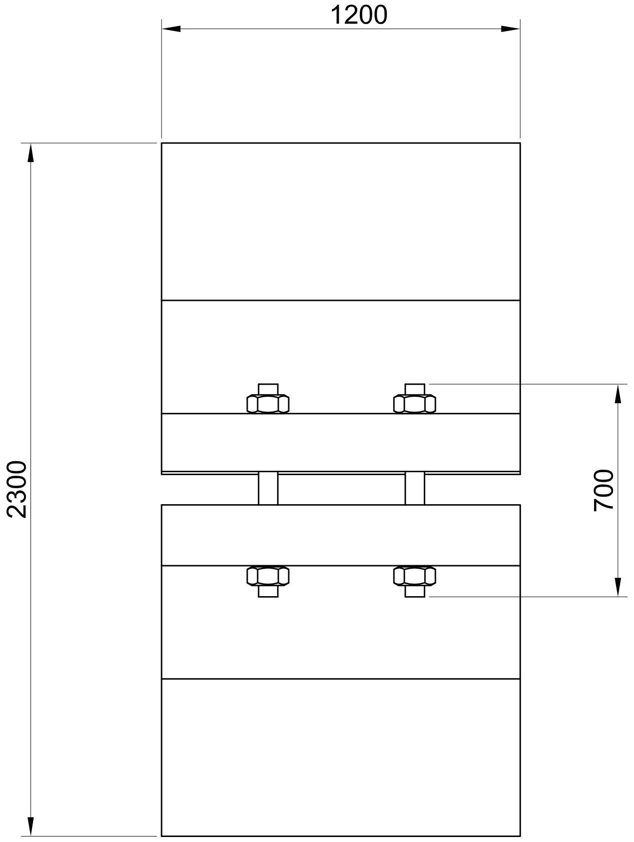

FRONT VIEW

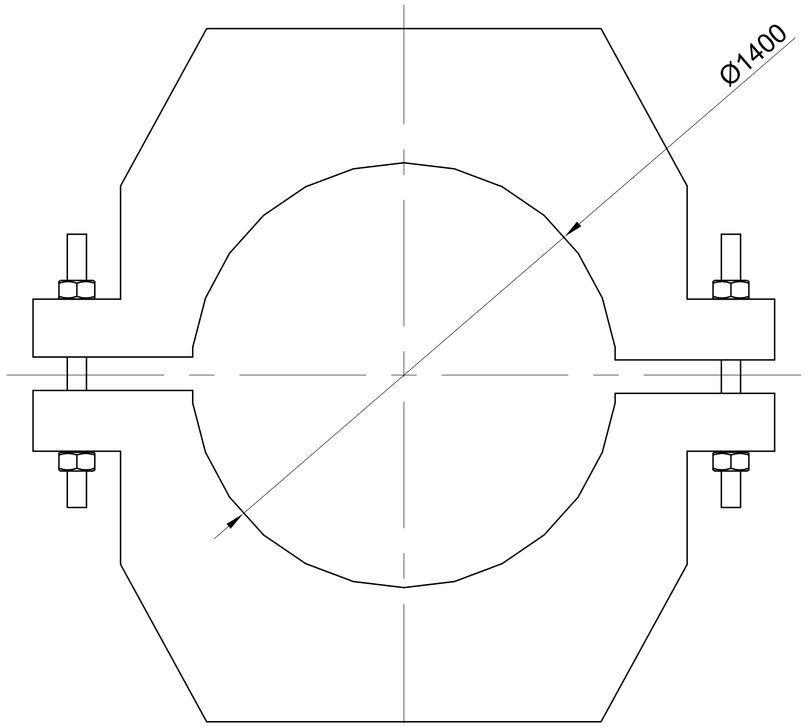

0	22/03/2023	IFR	Issued For Review	LJO	CGA	CGA
Rev	Date	Status	Comments	Drawn by	Checked by	Approved by

EUROSWAC

DORIS Marine

TYPICAL BALLAST
FOR PIPE Ø1400

Doris Marine Document N° ENG-PHQ-21-288-DR-203

Company Document N°

Sheet 1 Of 1

Scale :N/A

Size : A3